INSTRUCTIONS FOR USE

Concerto/Basic

04.BA.05_17EN • 06/2019

arjo
with people in mind

WARNING

To avoid injury, always read this Instructions for Use and accompanied documents before using the product.

Mandatory to read the Instructions for Use

Design Policy and Copyright
® and ™ are trademarks belonging to the Arjo group of companies.
© Arjo 2019.
As our policy is one of continuous improvement, we reserve the right to modify designs without prior notice. The content of this publication may not be copied either whole or in part without the consent of Arjo.

Contents

Foreword 4
Intended Use 5
Safety Instructions 6
Preparations 7
Product Specifications 8
Parts Designation 10
Assembly 12
Product Description / Functions 14
- Manual Raising and Lowering (Concerto Hydraulic and Basic Shower Trolley) 14
- Electric Raising and Lowering (Concerto Electric Shower Trolley) 14
- Side Supports 14
- Attaching the Mattress 15
- Removing the Mattress 15
- Brakes 16
- Straight Steering (Concerto Shower Trolley Only) 16
- Length Adjustment of Stretcher 16
- Tilting the Stretcher (Concerto Shower Trolley Only) 17
- Emergency Stop (Concerto Electric Shower Trolley Only) 17
- Drainage/Drainage Hose 18
- Attaching the Drainage Hose (3 Steps) 18
- To Remove the Drainage Hose (2 Steps) 18
- Battery Low Charge Warning 18
- Horizontal Position 19
- Horizontal Lock (Concerto Shower Trolley Only) 19
- Adjustable Back Support (Accessory for Concerto Shower Trolley) 19
- Wedge Pillow (Accessory) 19

Transfers with Concerto/Basic Shower Trolley 20
- From Bed 20
- To Bed 22
- From Bed with a Sliding Aid 24
- To Bed with a Sliding Aid 26
- From a Sling Lift 28
- To a Sling Lift 29

Shower with Concerto/Basic Shower Trolley 30
Home Care Use 32
Cleaning and Disinfection Instructions 34
Battery Instructions 36
Care and Preventive Maintenance 37
Troubleshooting 42
Technical Specifications 44
Dimensions 47
Labels 49
Approvals and List of Standards 51
Electromagnetic Compatibility 52
Parts and Accessories 54

Foreword

Thank You for Purchasing Arjo Equipment.

Your *Concerto®/Basic™* shower trolley is a part of a series of quality products designed especially for hospitals, nursing homes and other health care use.

Please contact us if you have any questions about the operation or maintenance of your Arjo equipment.

Please Read this *Instructions for Use* Thoroughly!

Please read this *Instructions for Use (IFU)* in its entirety before using your *Concerto/Basic* shower trolley. Information in this *IFU* is crucial to the proper operation and maintenance of the equipment, will help protect your product, and make sure that the equipment performs to your satisfaction. Some of the information in this *IFU* is important for your safety and must be read and understood to help prevent possible injury.

Unauthorized modifications on any Arjo equipment may affect its safety. Arjo will not be held responsible for any accidents, incidents or lack of performance that occur as a result of any unauthorized modification to its products.

Report Unexpected Operations or Events

Contact your local Arjo representative if any unexpected operations or events occur. The contact information appear on the last page of this *IFU*.

Serious incident

If a serious incident occurs in relation to this medical device, affecting the user, or the patient then the user or patient should report the serious incident to the medical device manufacturer or the distributor. In the European Union, the user should also report the serious incident to the Competent Authority in the member state where they are located.

Service and Support

A service routine must be performed on your *Concerto/Basic* shower trolley every year by qualified personnel to make sure the safety and operating procedures of your product. See section *Care and Preventive Maintenance on page 37*.

If you require further information, please contact Arjo for comprehensive support and service programs to maximize the long-term safety, reliability and value of the product.

Contact your local Arjo representative for replacement parts. The contact information appears on the last page of this *IFU*.

Definitions in this *IFU*:

WARNING

Means:
Safety warning. Failure to understand and obey this warning may result in injury to you or to others.

CAUTION

Means:
Failure to follow these instructions may cause damage to all or parts of the system.

NOTE

Means:
This is important information for the correct use of this system or equipment.

Means:
The name and address of the manufacturer.

Intended Use

This equipment must be used in line with its intended use and in accordance with these safety instructions. Anyone using this equipment must also have read and understood the instructions in this *Instructions for Use (IFU)*.

If there is anything you are not sure about, contact your Arjo representative.

This equipment is intended for assisted hygiene care, especially showering and bathing of residents in care environments like senior/assisted living, group home, special care, nursing homes, hospitals and home care. The equipment is intended for indoor use.

The *Concerto/Basic* shower trolley must be used by appropriately trained caregivers with adequate knowledge of the care environment, its common practices and procedures, and in accordance with the guidelines in the *Instructions for Use* (*IFU*).

The resident transfer to and from the *Concerto/Basic* shower trolley can be performed with a ceiling lift, mobile passive lift or by lateral transfer to and from a bed e.g. using an appropriate sliding aid.

The *Concerto/Basic* shower trolley should only be used for the purpose specified in these *Instructions for Use*. Any other use is prohibited.

Resident Assessment

We recommend that facilities establish regular assessment routines. Caregivers must assess each resident according to the following criteria prior to use:

- This equipment is mainly to be used by a resident that is almost completely bedridden and totally dependent.
- The resident's weight must not exceed 150 kg (330 lbs).
- The resident's length must be in the range of 140 and 200 cm (55 1/8" - 78 3/4").

If a resident does not meet these criteria an alternative equipment/system should be used.

Lifetime of the Equipment

The expected lifetime of this equipment is ten (10) years but depending on the storage of the battery, the use frequency and the charging intervals, the service life of the battery is 2-5 years.

Depending on level of wear some equipment parts such as castors, hand control and mattress may need to be replaced during the equipment lifetime according to information in the *Instructions for use (IFU)*.

Assembly of parts must be mounted according to instructions in the *Instructions for Use (IFU)*.

Safety Instructions

WARNING

To avoid explosion or fire, never use the equipment in oxygen rich environment, in presence of heat source or flammable anaesthetic gases.

WARNING

To avoid injury, make sure that the patient is not left unattended at any time.

WARNING

To avoid the device from tipping and the patient from falling, do not use the equipment on floor with recessed drains, holes or slopes exceeding a ratio of 1:50 (1.15°).

WARNING

To avoid electric shock, never use other electrical equipment near this device.

WARNING

To avoid entrapment, make sure to keep the patient's hair, arms and feet close to the body and use designated grab supports during any movement.

WARNING

To avoid falling during transfer, always make sure that the brakes are applied on all equipment being used.

WARNING

To avoid the device in use from tipping, do not raise or lower other equipment close to it and be aware of stationary object when lowering.

Preparations

Actions Before the First Use

(11 Steps)

1 Visually inspect *Concerto/Basic* shower trolley for transport damage.

2 The package should be recycled according to local regulations.

3 Check that all parts of the product are supplied. Compare with section *Parts Designation on page 10*. If any part is missing or damaged - do NOT use the product!

4 Read the *IFU*.

5 Disinfect the product according to section *Cleaning and Disinfection Instructions on page 34*.

6 Unpack the battery charger (*Concerto* electric shower trolley). For installation see Battery charger *IFU*.

7 Charge the battery for 24 hours. See the *Battery Charger IFU*.

8 Perform a functionality test on the *Concerto/Basic* shower trolley. See section *Care and Preventive Maintenance on page 37*.

9 Prepare an area that is dry, with good ventilation and out of direct sunlight for storage of the *Concerto/Basic* shower trolley.

10 Choose a designated area where the *IFU* should be kept, accessible at all times.

11 Make sure to have a rescue plan ready in case of a patient emergency.

NOTE
If you have any questions, please contact your local Arjo representative for support and service. See contact information in section *Arjo Addresses on page 55*.

Action Before Every Use

(5 Steps)

1 Check that all parts are in place. Compare with section *Parts Designation on page 10*.

2 Carry out a thorough inspection for damage.

3 If any part is missing or damaged - do NOT use the product!

4 **WARNING**

To prevent cross-contamination, always follow the disinfection instructions in this *IFU.*

5 Make sure that the battery is fully charged (*Concerto* electric shower trolley).

Concerto/Basic Shower Trolley Directions

The driving direction during transport is illustrated below.

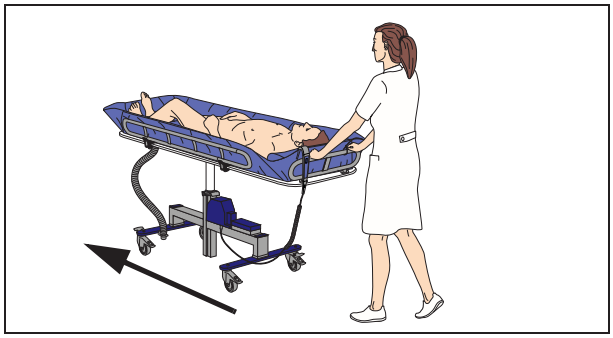

The directions right, left, foot end and head end are illustrated below.

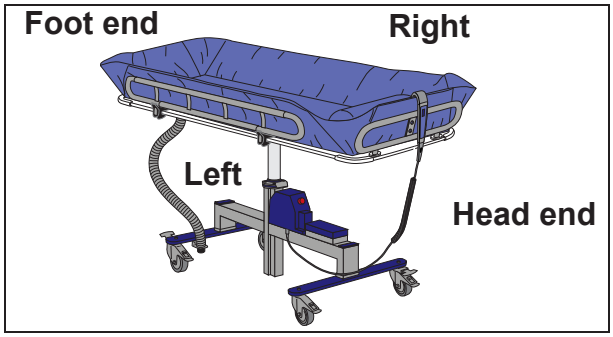

Product Specifications

The *Concerto/Basic* shower trolley system includes three versions with following characteristics:

Fig. 1

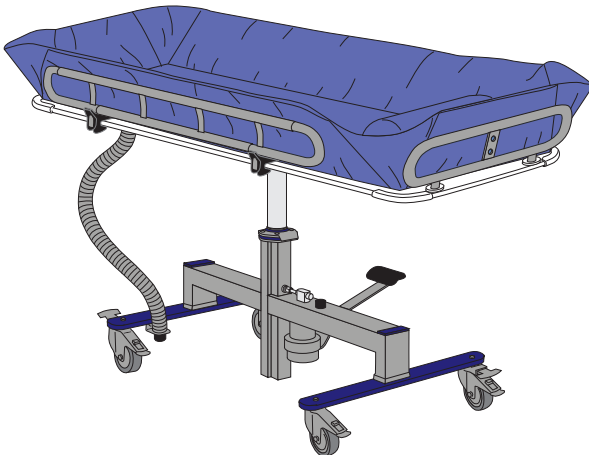

Concerto Hydraulic Shower Trolley

(See Fig. 1)

- 1600, 1900 and 2250 mm (63”, 74 3/4” and 88 5/8”)
- Manual raising and lowering
- Straight steering
- Tilt stretcher function
- Horizontal lock

Fig. 2

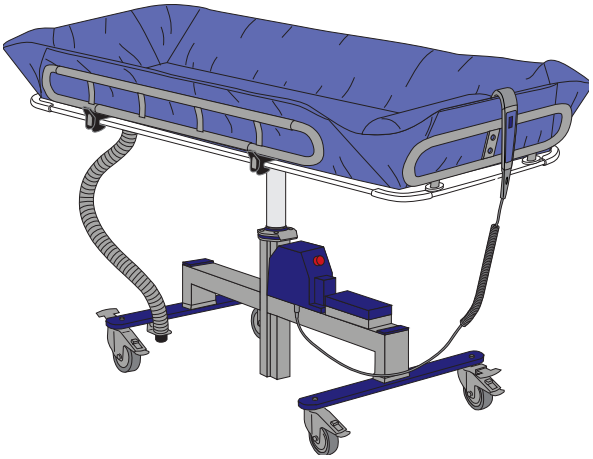

Concerto Electric Shower Trolley

(See Fig. 2)

- 1600, 1900 and 2250 mm (63”, 74 3/4” and 88 5/8”)
- Electrical raising and lowering
- Straight steering
- Tilt stretcher function
- Horizontal lock

Fig. 3

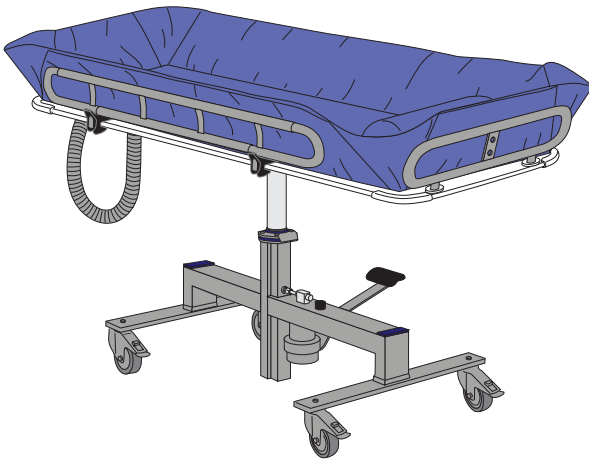

Basic Shower Trolley

(See Fig. 3)

- 1900 mm (74 3/4”)
- Manual raising and lowering

Intentionally left blank

Parts Designation

1 Shower mattress

2 Head cushion

3 Head support

4 Hand control
(*Concerto* electric shower trolley)

5 Stretcher

6 Battery holder
(*Concerto* electric shower trolley)

7 Straight steering
(*Concerto* hydraulic and electric shower trolley)

8 Castor brake

9 Drainage hose

10 Catches for side support

11 Side support

12 Foot support

13 Emergency stop

14 Filling plug for hydraulic oil
(*Concerto* electric shower trolley)

15 Drainage hole

16 Drainage outlet

17 Filling plug for hydraulic oil
(*Concerto* hydraulic and Basic shower trolley)

18 Pedal for raising/lowering
(*Concerto* hydraulic and Basic shower trolley)

19 Horizontal lock
(*Concerto* hydraulic and electric shower trolley)

Entire Product:
Applied part: Type BF
Protection against electric shock in accordance with IEC 60601-1.

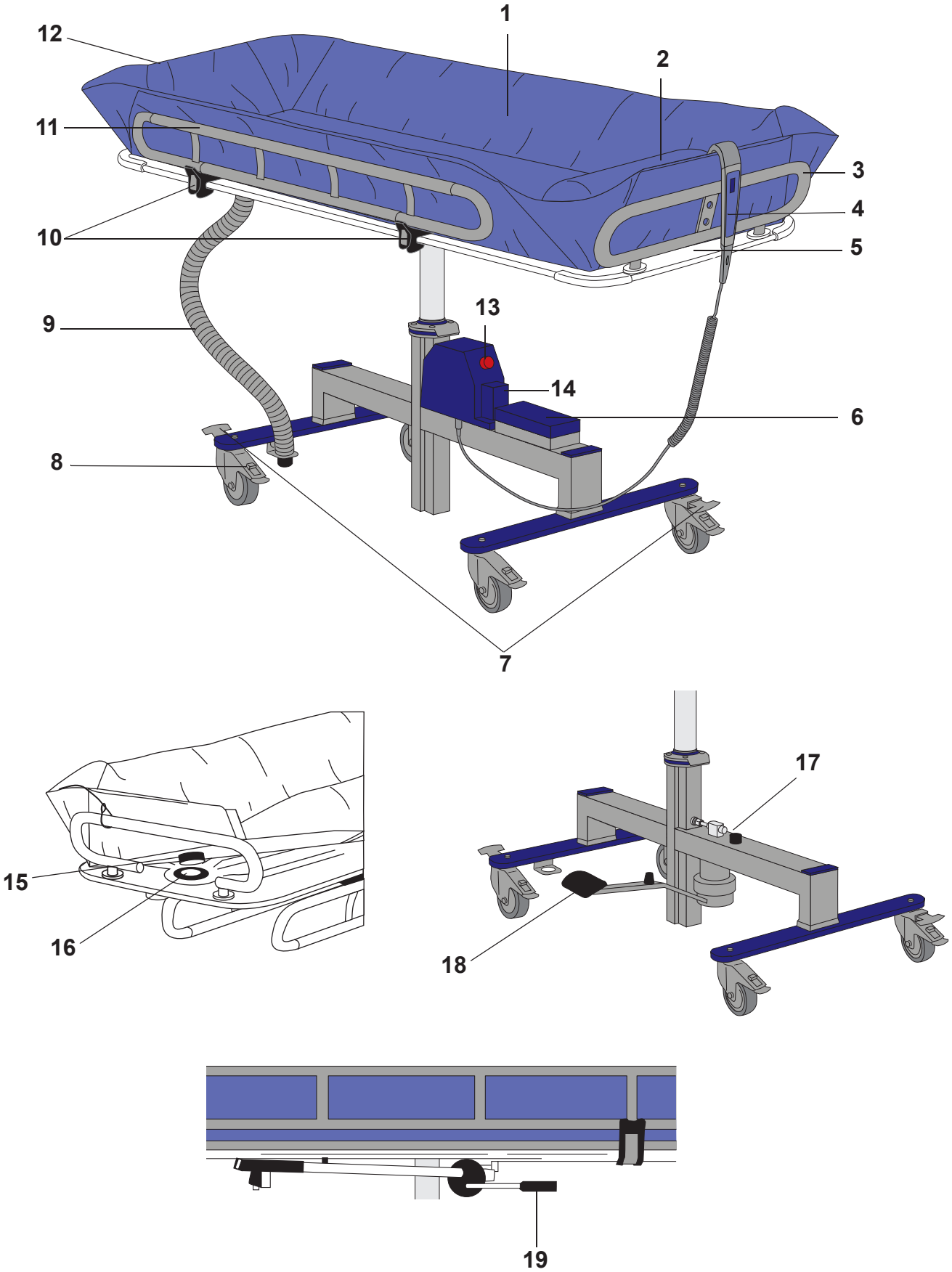
1
2
3
4
5
6
7
8
9
10
11
12
13
14
15
16
17
18
19

Assembly of Concerto/Basic Shower Trolley

Fig. 1

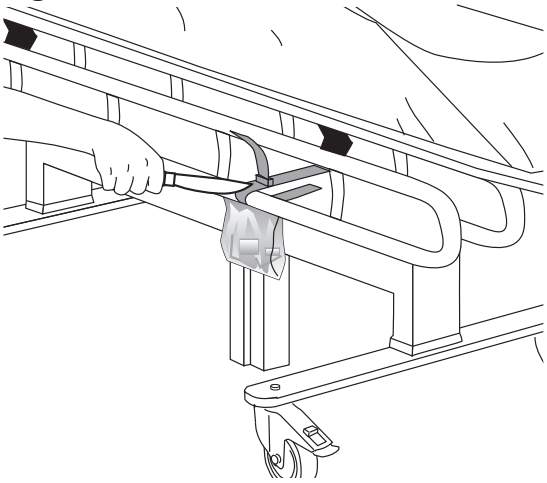

Fig. 2

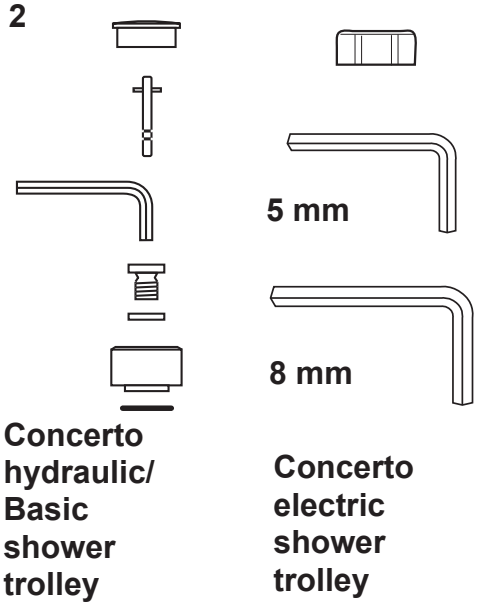

Fig. 3

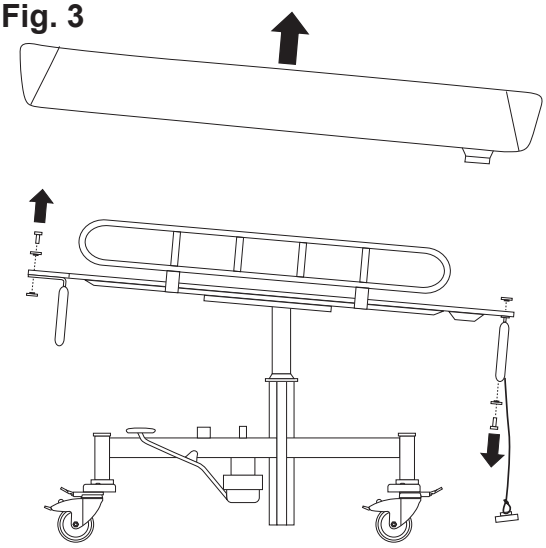

Follow these 15 Steps

1 Unpack the *Concerto/Basic* shower trolley.

2 Cut the straps that hold the side supports under the stretcher. **(See Fig. 1)**

3 Raise the side supports.

4 Check that the bag hanging on one of the straps contain the parts to mount the head/foot supports and the oil plug. **(See Fig 2)**

5 The head and foot supports at the short ends of the stretcher are mounted upside down when delivered. The head support is turned 180° sideways as well. **(See Fig. 3)**

Continue with the steps on the next page.

Fig. 4

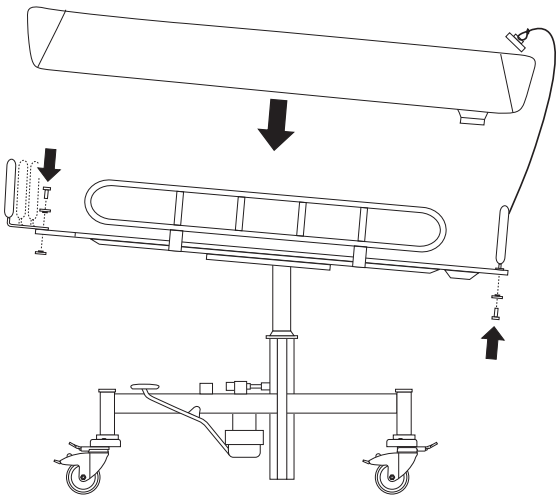

Fig. 5

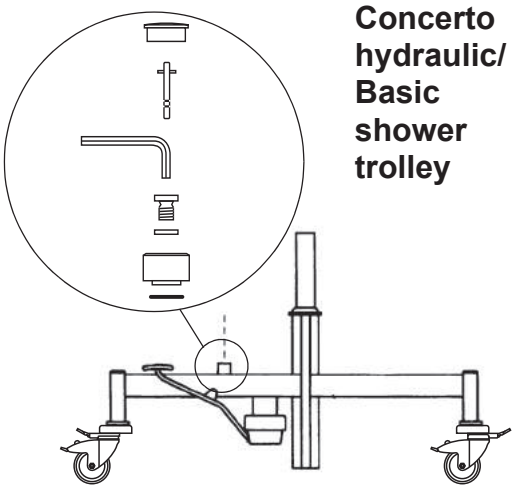

Fig. 6

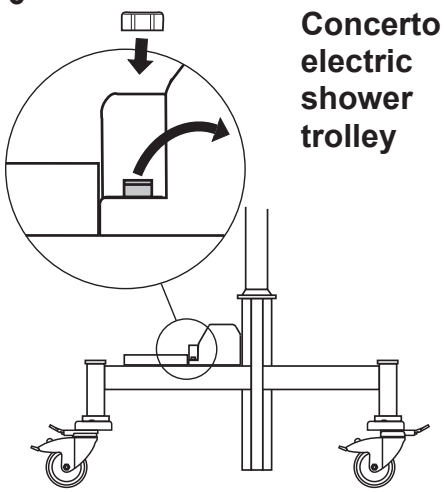

6 Loosen the screws on the head and foot supports with the Allen key. Turn the supports 180° upwards on top of the stretcher and then turn the head support 180° sideways. **(See Fig. 4)**

7 Place the head support in one of the three positions and the foot support in its only position. **(See Fig. 4)**

8 Tighten the screws with the Allen key.

9 Assemble the oil plug for *Concerto* Hydraulic/Basic shower trolley according to item *10* to *12* (use the Allen key provided in the bag).

10 Assemble the oil plug from the bag.

11 Remove the transport plug.

12 Replace with the assembled oil plug.**(See Fig. 5)**

13 Assemble the oil plug for *Concerto* Electric shower trolley according to item *14* to *15* (use the Allen key provided in the bag).

14 Remove the transport plug on the oil container.

15 Replace with the enclosed oil plug. **(See Fig. 6)**

Product Description / Functions

Fig. 1

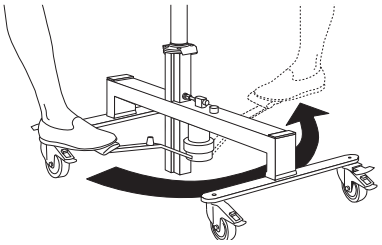

Manual Raising and Lowering (Concerto Hydraulic and Basic Shower Trolley)

The pedal can be used from both sides of the stretcher. Press it with your foot and slide it under the beam to the other side. **(See Fig. 1)**

- To raise the stretcher pump the pedal, using the full range of motion.
- To lower the stretcher, keep the pedal pressed down as far as possible.

Fig. 2

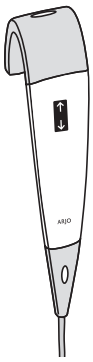

Electric Raising and Lowering (Concerto Electric Shower Trolley)

Unhook the hand control from its holder. **(See Fig. 2)**

- To raise the *Concerto* electric shower trolley, press the “up” arrow button on the hand control.
- To lower the *Concerto* electric shower trolley press the “down” arrow button on the hand control.

Fig. 3

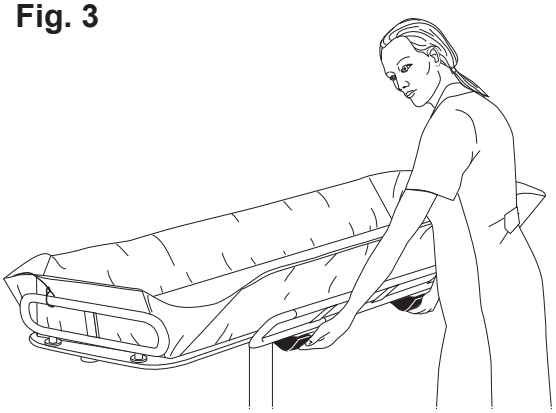

Side Supports

Fold down the side support by pressing the two catches at the same time. **(See Fig. 3)**

When raising the side support, make sure the two catches snap into place. **(See Fig. 4)**

Fig. 4

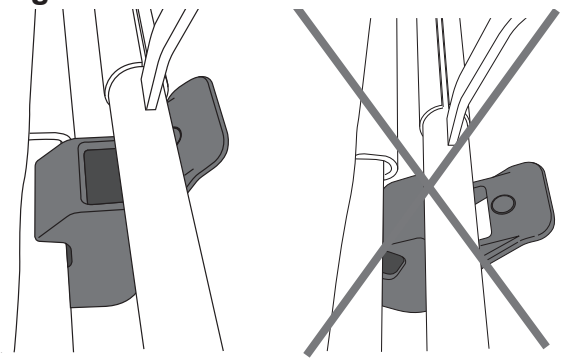

Fig. 1

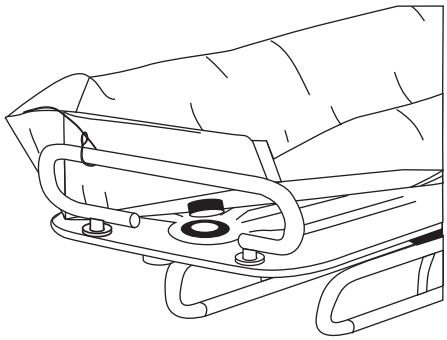

Fig. 2

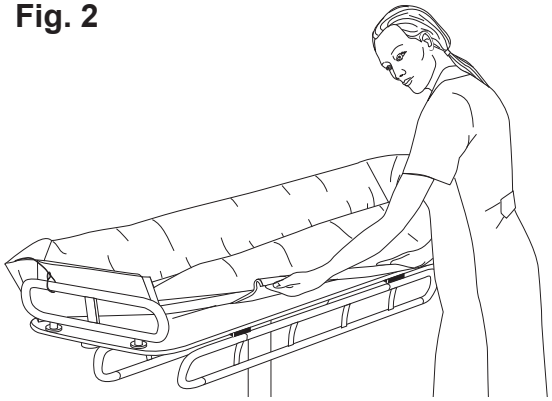

Fig. 3

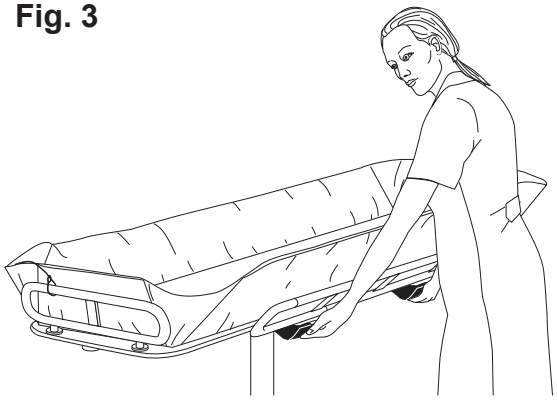

Attaching the Mattress

(4 Steps)

1 Fold down the side supports.

2 Press the part of the mattress with the drainage into the stretcher in order to get the right position. **(See Fig. 1)**

3 Place one side of the mattress side strip around the edge of the stretcher.

4 Snap the other mattress side strip around the stretcher. Press with some force and drag one hand along the side strip for it to fasten. **(See Fig. 2)**

NOTE
Do NOT wear jewellery or rings as it can potentially cause tears and holes in the mattress.

Removing the Mattress

(5 Steps)

1 Unscrew the flange nut from the drainage hole and pull the drainage hose out upwards. Lift up the end part of the mattress from the drainage outlet. **(See Fig. 1)**

2 Fold down the side supports. **(See Fig. 3)**

3 Undo one edge of the mattress side strip.

4 Pull and lift along the side strip to detach the mattress from the stretcher. **(See Fig. 2)**

5 Push the mattress towards the other side of the stretcher so the other side strip loosens.

Fig. 1

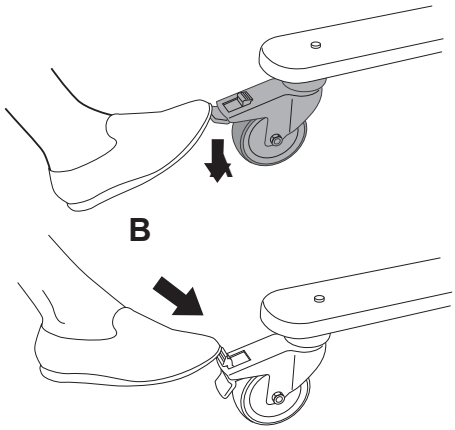

Brakes

Apply the brakes by pressing down the castor lock tab **(A)** with your foot. **(See Fig. 1)**

Release the brakes by pressing forward and down on the castor centre tab **(B)** with your foot. **(See Fig. 1)**

Fig. 2

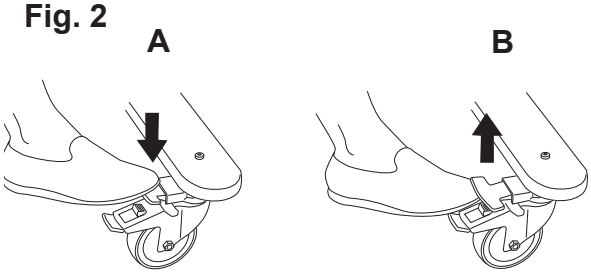

Straight Steering (Concerto Shower Trolley Only)

To facilitate transportation in corridors etc., the *Concerto* shower trolley is equipped with a straight steering device. The straight steering tabs are located on the castors diagonally from each other.

The straight steering device is activated by pressing down the tab **(A)** with your foot. **(See Fig. 2)**

Release it by lifting the tab **(B)** with your foot. **(see Fig. 2)**

Fig. 3

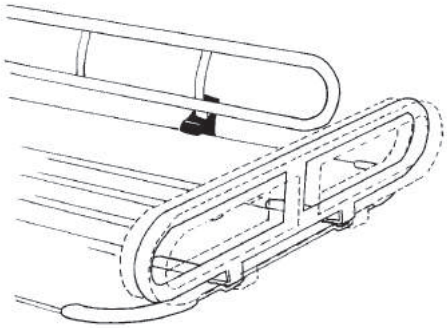

Length Adjustment of Stretcher

The head support can be adjusted to alter the length of the stretcher. Unscrew the two screws with an Allen key and move the support to the desired position. Then tighten the screws securely. **(See Fig. 3)**

Fig. 1

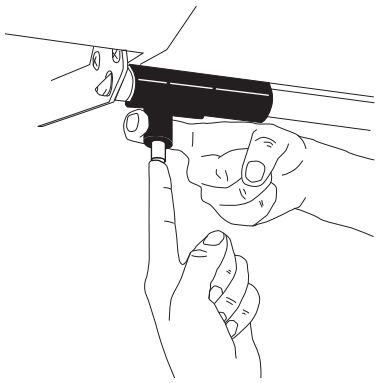

Tilting the Stretcher (Concerto Shower Trolley Only)

(2 Steps)

The stretcher can be tilted to help with cleaning and disinfection. This operation is easier done with brakes applied. The tilting mechanism is located under the stretcher.

1 Press the button, then move the catch to one side. **(See Fig. 1)**

2 **WARNING**

To avoid the patient from falling out of the device, make sure that all catches are in a locked position.

Tilt the stretcher. **(See Fig. 2)**

Fig. 2

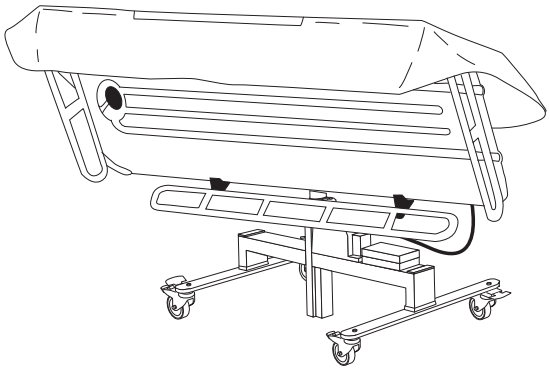

Fig. 3

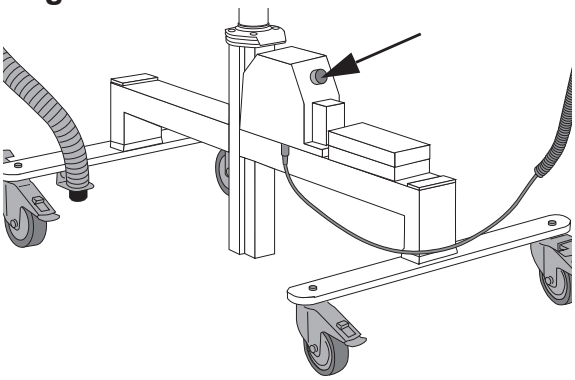

Emergency Stop (Concerto Electric Shower Trolley Only)

If, for any reason, the *Concerto* electric shower trolley does not respond to the hand control buttons, stop the raising and lowering movement of the stretcher by pressing the emergency stop button. **(See Fig. 3)**

Contact qualified personnel if that happens.

If the emergency button is pressed by accident, it can be reset by turning the button clockwise until it pops back out.

Fig. 1

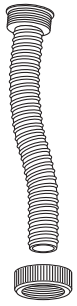

Fig. 2

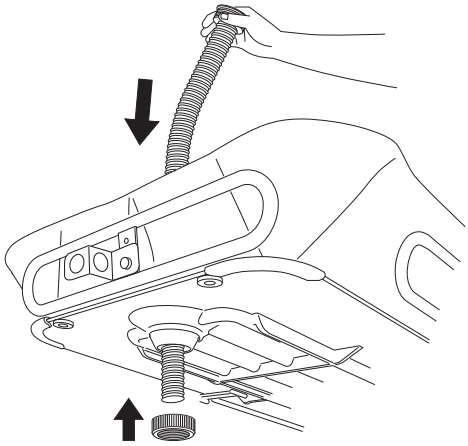

Fig. 3

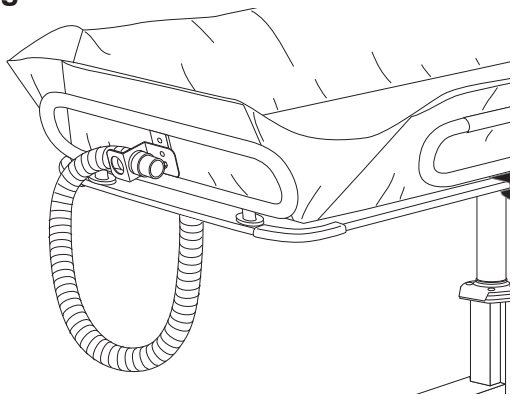

Drainage/Drainage Hose

The *Concerto/Basic* shower trolley comes with a drainage hose. **(See Fig. 1)**

The mattress design combined with the slope of the stretcher make sure there is proper drainage.

The flexible drainage hose can be connected to a floor drain to reduce splashing.

Attaching the Drainage Hose (3 Steps)

1 Insert the drainage hose through the drainage hole. **(See Fig. 2)**

2 Under the stretcher, screw the flange nut to the end of the hose. **(See Fig. 2)**

3 Before transportation, put the drainage hose nozzle in its holder. **(See Fig. 3)**

To Remove the Drainage Hose (2 Steps)

1 Under the stretcher, unscrew the flange nut from the drainage hole.

2 Pull the drainage hose out upwards.

Battery Low Charge Warning

The low charge battery warning LED lamp is located on the cover of the hydraulic unit on the chassis. If the battery is running low, the warning LED will turn yellow when the buttons on the hand control are pushed. The battery should then be recharged as soon as possible.

NOTE
To avoid loss of operation, charge the battery when the warning LED lamp is lit.

NOTE
It is recommended to use two batteries, one in the charger and one in the *Concerto/Basic* shower trolley.

Fig. 1

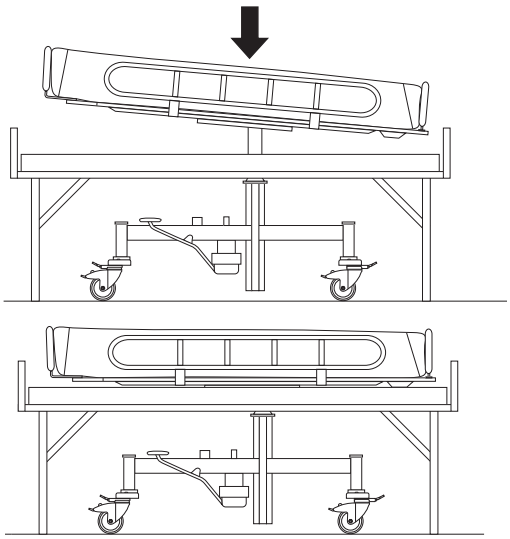

Horizontal Position

The *Concerto* hydraulic and electric shower trolley always adjusts it selves automatically to a horizontal position when lowered onto a bed. **(See Fig. 1)**

Fig. 2

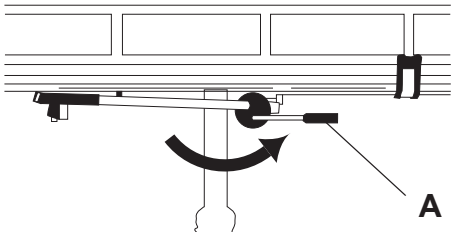

Horizontal Lock (Concerto Shower Trolley Only)

The *Concerto* shower trolley is equipped with a special fitting which locks the stretcher in a horizontal position for transport or when the mattress is going to be filled with water.

Move the lever **(A)** to the right to lock the stretcher in a horizontal position. **(See Fig. 2)**

Fig. 3

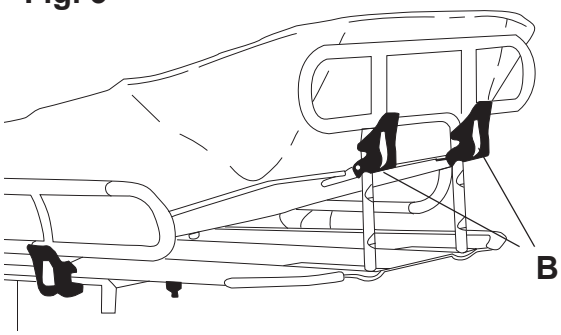

Adjustable Back Support (Accessory for Concerto Shower Trolley)

Pull the head support up to raise it. Make sure that the catches are in a locked position.

To lower it, press the catches **(B)** while gently lowering the head support. **(See Fig. 3)**

Fig. 4

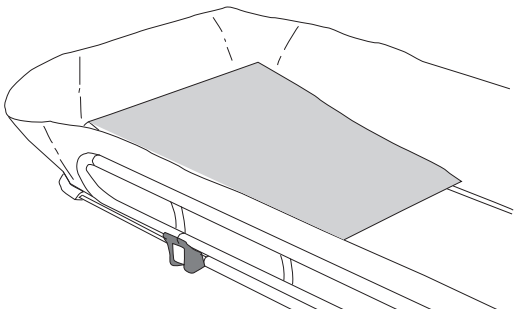

Wedge Pillow (Accessory)

Place wedge pillow at the head end of the mattress. **(See Fig. 4)**

Transfers with Concerto/Basic Shower Trolley

Fig. 1

Fig. 2

From Bed

(22 Steps)

WARNING

To avoid patient falling out of the device, make sure that all side supports are in a locked position.

WARNING

To avoid entrapment, make sure to keep the patient's hair, arms and feet close to the body and use designated grab supports during any movement.

WARNING

To avoid the patient from falling or caregiver from being injured, make sure that there are two or more caregivers present during the patient transfer process.

1 Apply the wheel brakes on the bed.

2 Raise the bed to an ergonomic height, if possible.

3 Fold down the *Concerto/Basic* shower trolley side support on the transfer side.

4 If using a manual hydraulic *Concerto/Basic* shower trolley, make sure the foot pump is turned away from the transfer side.

5 Lower the bed rail on the transfer side, if any.

6 Place one caregiver on each side of the bed.

7 Position the patient close to the transfer side.

8 Turn the patient to his or her side, away from the transfer side.

9 The caregiver, whom the patient is turned towards, holds the patient. **(See Fig. 1)**

10 Fold down the other *Concerto/Basic* shower trolley side support, opposite to the transfer side and bed.

11 The second caregiver positions *Concerto/Basic* shower trolley over the bed as close as possible to the patient. **(See Fig. 2)**

Continue with the steps on the next page.

Fig. 3

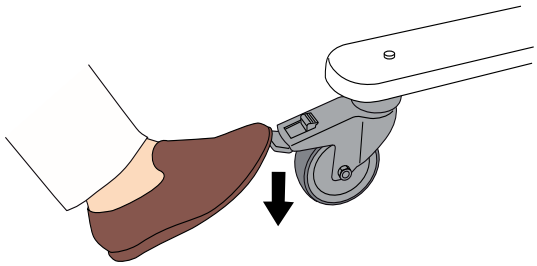

Fig. 4

Fig. 5

Fig. 6

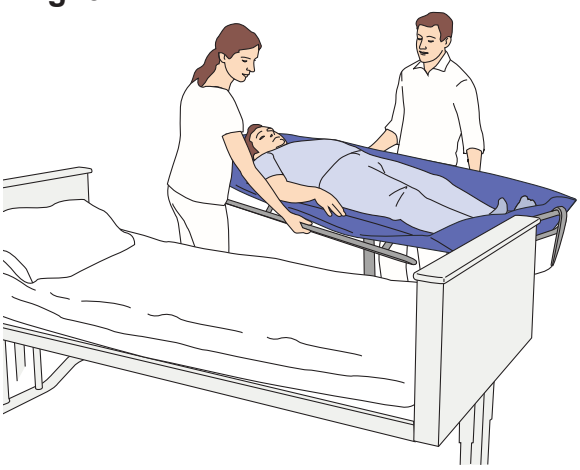

12 **WARNING**

To avoid falling during transfer, always make sure that the brakes are applied on all equipment being used.

Apply the brakes on *Concerto/Basic* shower trolley. **(See Fig. 3)**

13 Lower *Concerto/Basic* shower trolley until it compresses the mattress on the bed.

14 Turn the patient onto his or her back and onto the *Concerto/Basic* shower trolley.

NOTE
To ease the transfer process, use a sliding aid, according to section *From Bed with a Sliding Aid on page 24*

15 **WARNING**

To avoid falling, make sure that the patient is positioned in accordance with this *IFU*.

Both caregivers need to help the patient towards the middle of the *Concerto/Basic* shower trolley. *(***See Fig. 4)**

16 Fold up the *Concerto/Basic* shower trolley side support, opposite from the transfer side and bed. **(See Fig. 5)**

17 Place the head cushion under the patient's head for comfort.

18 Raise the *Concerto/Basic* shower trolley enough to clear the bed.

19 Release the brakes on *Concerto/Basic* shower trolley.

20 Move *Concerto/Basic* shower trolley away from the bed and fold up the *Concerto/Basic* shower trolley side support on the transfer side. **(See Fig. 6)**

21 Cover the patient if undressed.

22 Adjust the *Concerto/Basic* shower trolley to an ergonomic height for the caregivers.

To Bed

(17 Steps)

WARNING

To avoid patient falling out of the device, make sure that all side supports are in a locked position.

WARNING

To avoid the patient from falling or caregiver from being injured, make sure that there are two or more caregivers present during the patient transfer process.

Fig. 1

1 Apply the wheel brakes on the bed.

2 Raise the bed to an ergonomic height, if possible.

3 Lower the bed rail on the transfer side, if any.

4 If using a manual hydraulic *Concerto/Basic* shower trolley, make sure the foot pump is turned away from the transfer side.

5 Fold down the *Concerto/Basic* shower trolley side support on the transfer side, towards the bed. **(See Fig. 1)**.

Fig. 2

6 Position *Concerto/Basic* shower trolley over the bed as far in as possible. **(See Fig. 2)**

7 **WARNING**

To avoid falling during transfer, always make sure that the brakes are applied on all equipment being used.

Apply the brakes on *Concerto/Basic* shower trolley. **(See Fig. 3)**

Fig. 3

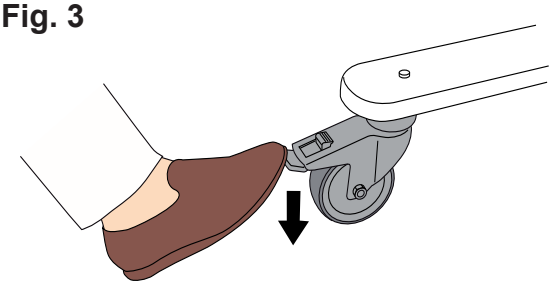

8 Lower *Concerto/Basic* shower trolley until it compresses the mattress on the bed.

Continue with the steps on the next page.

Fig. 4

Fig. 5

Fig. 6

9 Fold down the other *Concerto/Basic* shower trolley side support, opposite from the transfer side. **(See Fig. 4)**

10 Both caregivers need to help the patient towards the bed. **(See Fig. 5)**

11 Turn the patient to his or her side, away from the transfer side. Make sure the patient in not laying on the *Concerto/Basic* shower trolley mattress. **(See Fig. 6)**

12 The caregiver, whom the patient is turned towards, holds the patient. **(See Fig. 6)**

13 Raise the *Concerto/Basic* shower trolley from the bed.

14 Release the brakes on *Concerto/Basic* shower trolley.

15 Move the *Concerto/Basic* shower trolley away from bed.

16 Turn the patient onto his or her back.

17 Disinfect *Concerto/Basic* shower trolley after each use to prevent cross-contamination according to section *Cleaning and Disinfection Instructions on page 34*.

From Bed with a Sliding Aid

(18 Steps)

For any sliding aid questions, refer to its respective sliding aid *IFU*.

WARNING

To avoid patient falling out of the device, make sure that all side supports are in a locked position.

WARNING

To avoid the patient from falling or caregiver from being injured, make sure that there are two or more caregivers present during the patient transfer process.

NOTE
For big gaps to slide across, between the *Concerto/Basic* shower trolley and the bed, use a slide board in between the two, to bridge the gap.

Fig. 1

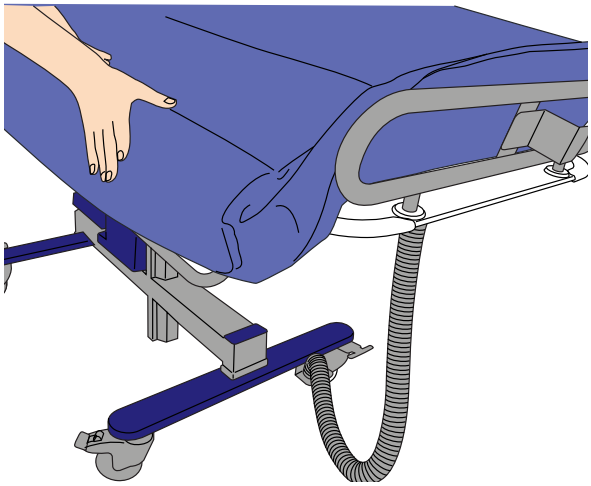

Fig. 2

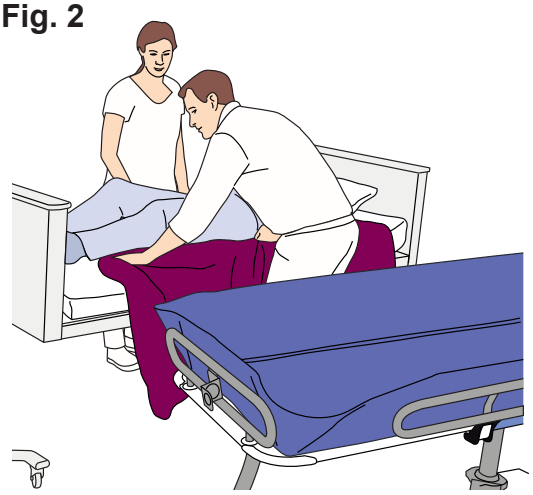

1 Fold down the *Concerto/Basic* shower trolley side support and the long side of the mattress on the transfer side. **(See Fig. 1)**

2 If using a manual hydraulic *Concerto/Basic* shower trolley, make sure the foot pump is turned away from the transfer side.

3 Apply the wheel brakes on the bed.

4 Raise the bed to an ergonomic height, if possible.

5 Lower the bed rail on the transfer side, if any.

6 Two caregivers must be present, one on each side of the bed.

7 Place the sliding aid under the patient. **(See Fig. 2)**

8 Position *Concerto/Basic* shower trolley side to side with the bed. **(See Fig. 3)**

9 Adjust height so that *Concerto/Basic* shower trolley is slightly lower than the bed.

Continue with the steps on the next page.

Fig. 3

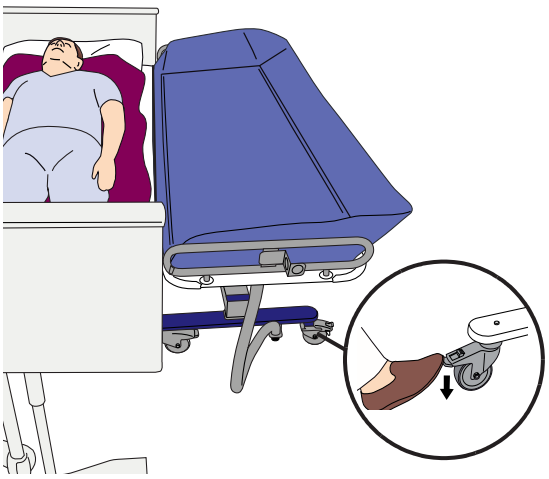

Fig. 4

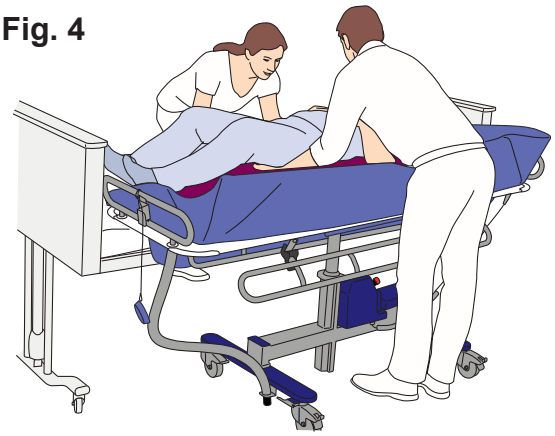

Fig. 5

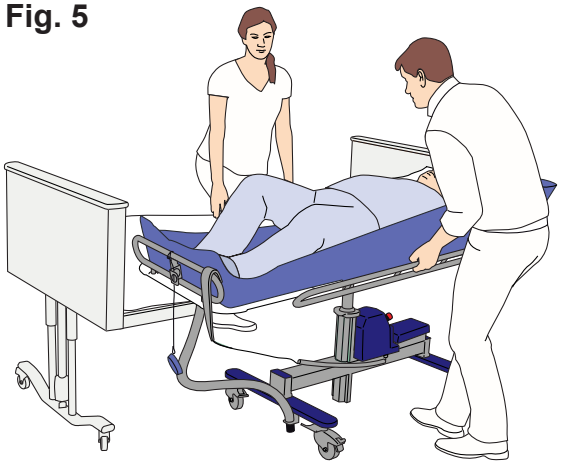

Fig. 6

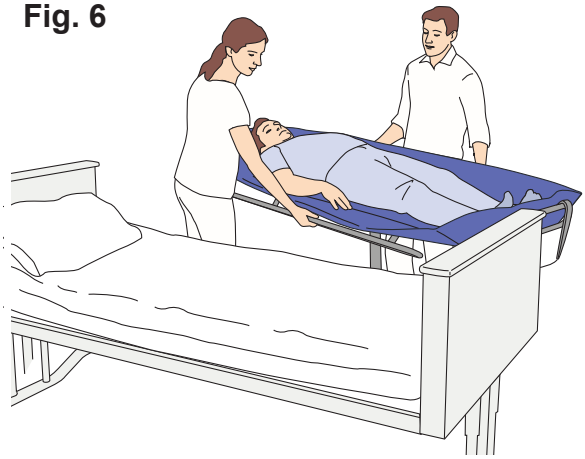

10 **WARNING**

To avoid falling during transfer, always make sure that the brakes are applied on all equipment being used.

Apply the brakes on *Concerto/Basic* shower trolley. **(See Fig. 3)**

11 Fold down the *Concerto/Basic* shower trolley side support, opposite from the transfer side.

12 Both caregivers transfer the patient with the sliding aid to the *Concerto/Basic* shower trolley. **(See Fig. 4)**

13 Place the head cushion under the patient's head for comfort.

14 Fold up the *Concerto/Basic* shower trolley side support opposite to the transfer side. **(See Fig. 5)**

15 Release the brakes on *Concerto/Basic* shower trolley.

16 Move *Concerto/Basic* shower trolley enough to the side and fold up the side support on the transfer side. **(See Fig. 6)**

17 **WARNING**

To avoid injury, always remove the sliding aid from underneath the patient after every use. Never leave the sliding aid in bed under the patient.

Remove the sliding aid from the patient.

18 Adjust the *Concerto/Basic* shower trolley to an ergonomic height for the caregivers.

To Bed with a Sliding Aid

(16 Steps)

For any sliding aid questions, refer to its respective sliding aid *IFU*.

WARNING

To avoid patient falling out of the device, make sure that all side supports are in a locked position.

WARNING

To avoid the patient from falling or caregiver from being injured, make sure that there are two or more caregivers present during the patient transfer process.

NOTE
For big gaps to slide across, between the *Concerto/Basic* shower trolley and the bed, use a slide board in between the two, to bridge the gap.

1 Apply the wheel brakes on the bed.

2 Raise the bed to an ergonomic height, if possible.

3 Lower the bed rail on the transfer side, if any.

4 Place a sliding aid under the patient.

5 If using a manual hydraulic *Concerto/Basic* shower trolley, make sure the foot pump is turned away from the transfer side.

6 Position *Concerto/Basic* shower trolley close to the bed enough to be able to fold down the its side support.

7 Fold down the *Concerto/Basic* shower trolley side support and its long side of the mattress on the transfer side. **(See Fig. 1)**

Fig. 1

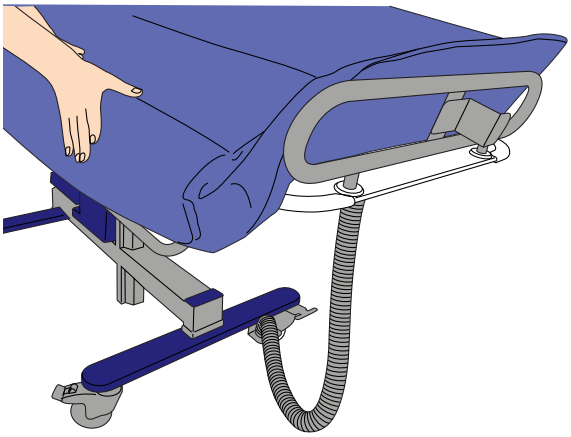

Continue with the steps on the next page.

Fig. 2

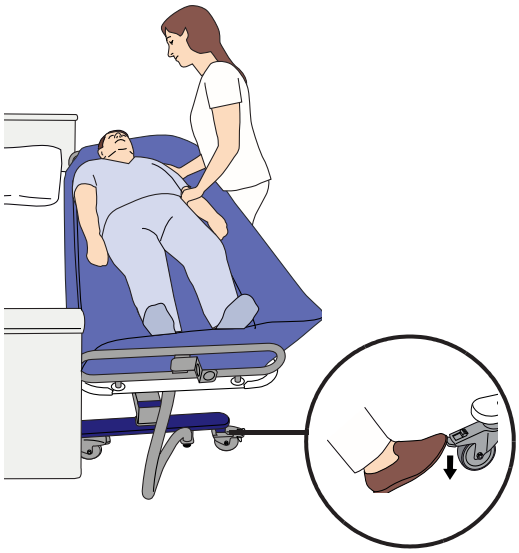

8 Position *Concerto/Basic* shower trolley side to side with the bed. **(See Fig. 2)**

9 Adjust the height of *Concerto/Basic* shower trolley slightly higher than the bed.

10 **WARNING**

To avoid falling during transfer, always make sure that the brakes are applied on all equipment being used.

Apply the brakes on *Concerto/Basic* shower trolley. **(See Fig. 2)**

Fig. 3

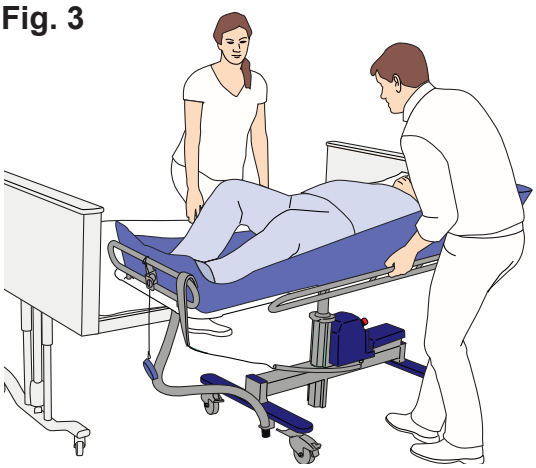

11 Fold down the *Concerto/Basic* shower trolley side support, opposite to the transfer side. **(See Fig. 3)**

12 Both caregivers transfer the patient with the sliding aid to the bed. **(See Fig. 4)**

13 Release the *Concerto/Basic* shower trolley brakes.

14 Move *Concerto/Basic* shower trolley away from the bed.

15 Remove the sliding aid from the patient.

Fig. 4

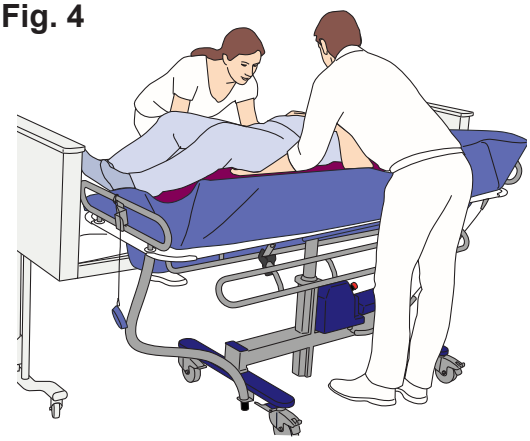

16 Disinfect *Concerto/Basic* shower trolley after each use to prevent cross-contamination according to section *Cleaning and Disinfection Instructions on page 34.*

From a Sling Lift

(10 Steps)

For any sling questions, refer to its respective sling and lift *IFU*.

These transfer steps apply to both floor and ceiling lifts with slings.

Fig. 1

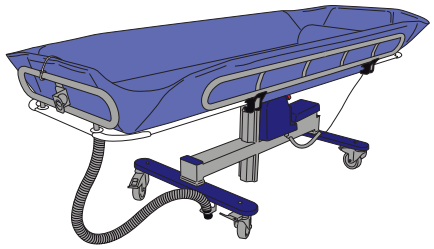

1 Lower *Concerto/Basic* shower trolley to lowest height. **(See Fig. 1)**

Fig. 2

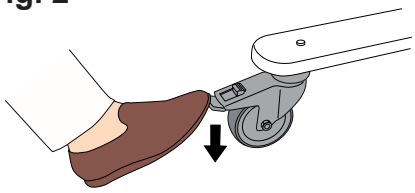

2 Apply the brakes on *Concerto/Basic* shower trolley. **(See Fig. 2)**

3 Make sure both side supports are folded up.

4

> **WARNING**
>
> **To avoid falling, make sure that the patient is positioned in accordance with this *IFU.***

Lower lift with patient onto *Concerto/Basic* shower trolley. **(See Fig. 3)**

Fig. 3

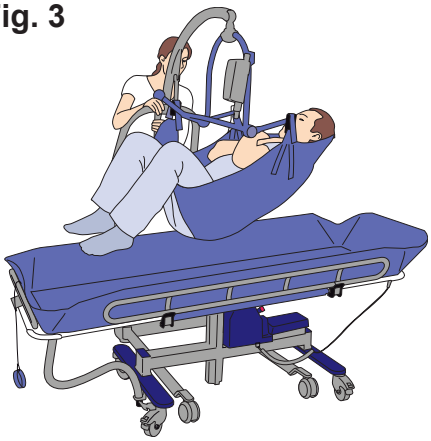

5 Detach the sling from the lift. **(See Fig. 4)**

6 Move the lift away from *Concerto/Basic* shower trolley.

7 Adjust the *Concerto/Basic* shower trolley to an ergonomic height.

Fig. 4

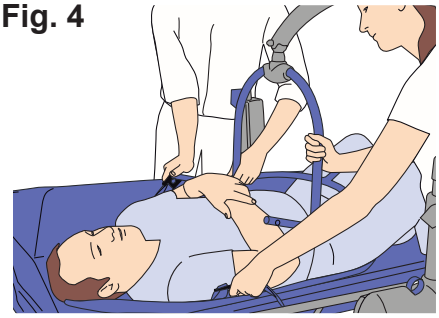

8 Remove the sling from the patient.

9 Place the head cushion under the patient's head for comfort.

10 Release the brakes on *Concerto/Basic* shower trolley.

To a Sling Lift

(8 Steps)

For any sling questions, refer to its respective sling and lift *IFU*.

These transfer steps apply to both floor and ceiling lifts with slings.

1 Apply the brakes on the *Concerto/Basic* shower trolley. **(See Fig. 1)**

2 Raise the *Concerto/Basic* shower trolley to an ergonomic height.

3 Position the sling under the patient.

4 Lower the *Concerto/Basic* shower trolley to its lowest height. **(See Fig. 2)**

5 Position the lift over the patient.

6 Attach the sling to the lift. **(See Fig. 3)**

7 Lift the patient out of the *Concerto/Basic* shower trolley. **(See Fig. 4)**

8 Disinfect *Concerto/Basic* shower trolley after each use to prevent cross-contamination according to section *Cleaning and Disinfection Instructions on page 34*.

Fig. 1

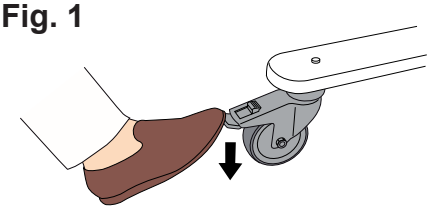

Fig. 2

Fig. 3

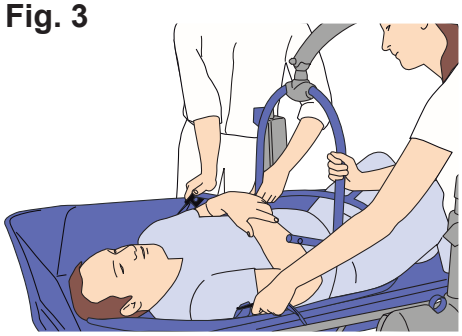

Fig. 4

Shower with Concerto/Basic Shower Trolley

In case you have an Arjo Shower panel, use it according to its separate Instructions for Use.

(12 steps)

1 Move the *Concerto/Basic* shower trolley to the Arjo shower panel or to a bathroom with a shower and toilet/sink.

2 Make sure that the drainage hole goes over the sink.

3 Apply the brakes and lower or raise the *Concerto/Basic* shower trolley to a comfortable ergonomic working height.

4 Lift off the shower handle and hold it over the *Concerto/Basic* shower trolley.

5 Set the thermostat mixer at the desired temperature.

6 **WARNING**

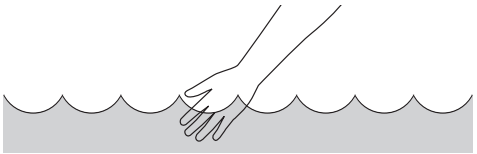

To prevent scalding, always check the water temperature with your naked hand before directing the water on the patient.

Do not use gloves as it may insulate to the extent that the water temperature can be misjudged. Point the flow of the water away from the patient.

Turn on the shower water.

7 Adjust the temperature and the flow of water so that it suits the patient.

8 Shower the patient. **(See Fig. 1)**

9 After the shower, turn off the water and dry the patient.

10 Release the brakes.

11 Raise the *Concerto/Basic* shower trolley to an ergonomic height and transport the patient back.

12 Disinfect *Concerto/Basic* shower trolley after each use to prevent cross-contamination according to section *Cleaning and Disinfection Instructions on page 34*.

Fig. 1

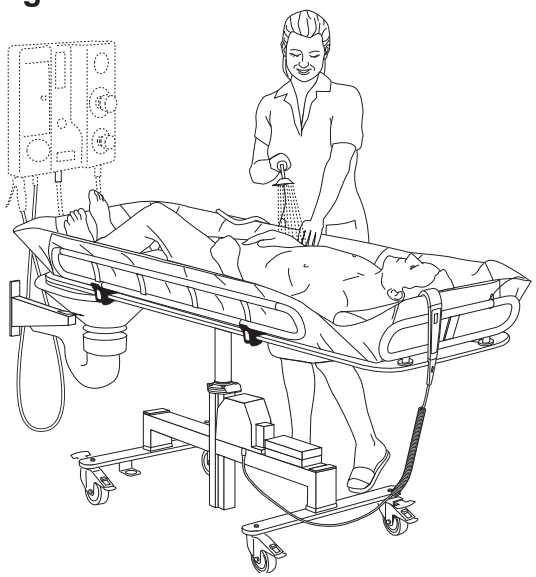

Home Care Use

For Distributors and Renters

When transporting *Concerto* shower trolley to the customer with a van:

- Make sure the product is properly secured during transport.
- Avoid manoeuvring the shower trolley in dirty ground when transporting it to and from the van.

When delivering the *Concerto* shower trolley make sure that:

- You read this *IFU* together with the receiver (including relatives and caregivers).
- Show the features and intended usage described in the *IFU* with help of the real product.
- The user has understood the cleaning and disinfection instructions.
- Read all the warnings to the receiver.
- The environment fulfils all the requirements described in this *IFU*.

Cleaning and disinfection:

- Make sure that the cleaning and disinfection procedure described in this *IFU* always is carried out before the product reaches a new user.
- Make sure that the cleaning and disinfection procedure described in this *IFU* always is carried out before and after any type of service procedure.

Using the Concerto Shower Trolley

Before using the *Concerto* shower trolley in home environment make sure that: (See Fig. 1-3)

WARNING

To avoid the device from tipping and the patient from falling, do not use the equipment on floor with recessed drains, holes or slopes exceeding a ratio of 1:50 (1.15°).

- All caregivers, including relatives, have read and understood the instructions in this *IFU*.
- All carpets and rugs in the environment are removed.
- All thresholds in the environment are removed.
- All stairs and edges have a fence and safety gate to prevent the shower trolley from rolling down.
- There is room enough in the environment for use of the shower trolley.

During Storage of *Concerto* shower trolley make sure that:

WARNING

To avoid strangulation, make sure to never leave children unattended near the equipment.

- No children can access the shower trolley.
- No pets can come in contact with the shower trolley.
- The storage environment fulfils the requirements according to *Technical Specifications on page 44*.

Fig. 1

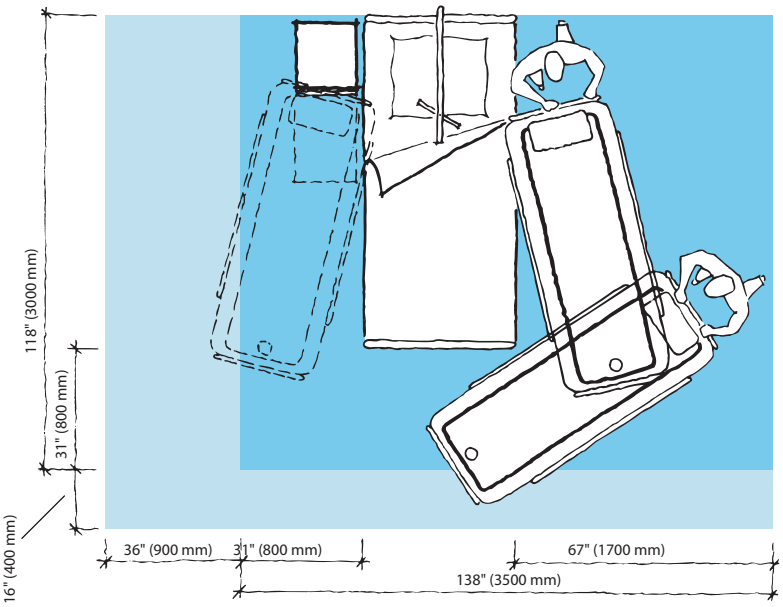

Fig. 2

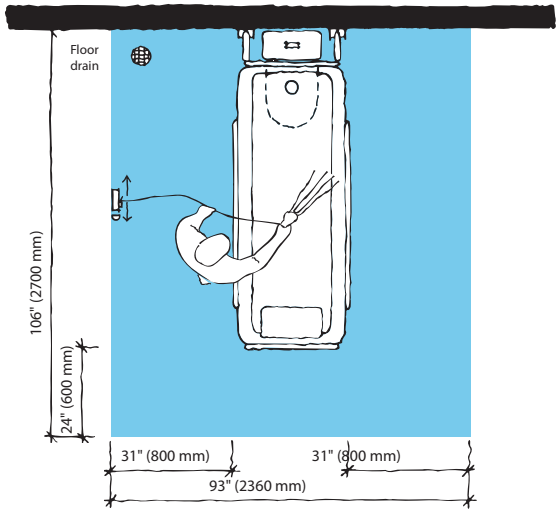

Fig. 3

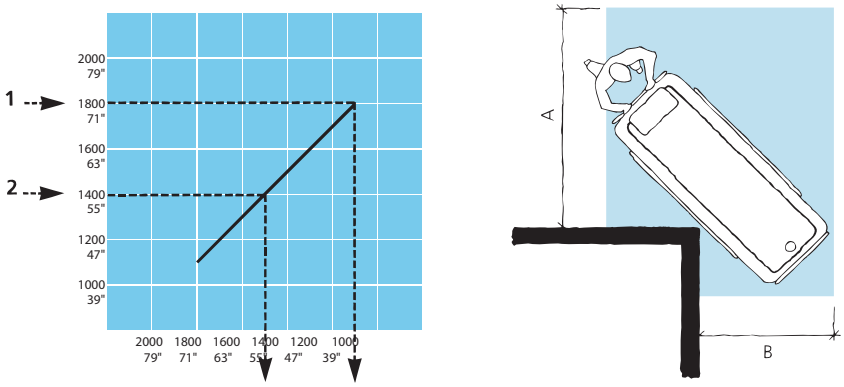

Cleaning and Disinfection Instructions

Only use Arjo Branded Disinfectant Cleansers (e.g. Arjo Clean™).

If you have any questions regarding disinfecting the *Concerto* shower trolley, or wish to order disinfectant, contact Arjo Customer Service. See section *Parts and Accessories on page 54*.

Make sure to have the Material Safety Data Sheets (MSDS) available for the disinfectant being used.

WARNING

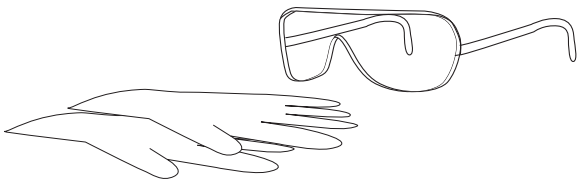

To avoid eye and skin damage, always use protective glasses and gloves. If contact occurs rinse with plenty of water. If eyes or skin becomes irritated, contact a physician. Always read the IFU and the Material Safety Data Sheet (MSDS) of the disinfectant.

WARNING

To prevent cross-contamination, always follow the disinfection instructions in this *IFU.*

WARNING

To avoid eye or skin irritation, never disinfect in the presence of a patient.

CAUTION

To avoid damage on the equipment only use Arjo branded disinfectants.

Allowed Disinfectants

- Arjo Clean
- Arjo General Purpose Disinfectant
- Arjo Disinfectant Cleanser IV
- Arjo All Purpose Disinfectant
- Arjo CenKleen IV

Accessories for Disinfecting the Concerto Shower Trolley

- Protective gloves
- Protective glasses
- Spray bottle with disinfectant or disinfection spray handle with disinfectant
- Spray bottle with water or shower handle with water
- Cloths - wet and dry
- Disposable towels
- Soft bristle brush
- Long handled soft bristled brush

Always Follow these 24 Steps for Proper Cleaning and Disinfection

If an Arjo shower panel will be used, see respective *IFU*.

Removing visual residue (Step 1-4 of 24)

1 Remove drainage hose with all parts according to section *To Remove the Drainage Hose (2 Steps) on page 18*. Detach the pillow and the cushions.

2 Clean the *Concerto* shower trolley from visible residue using a cloth soaked in water or if more suitable by spraying/showering water using a brush and/or wipe with a clean cloth. Start from the top and move downwards.

3 Clean all removed parts from visible residue with a cloth soaked in water or shower water using a brush and/or wipe with a clean cloth.

4 Spray/shower with water in drain. Use a long handled brush to scrub the drainage hole in the mattress and the drainage outlet.

Cleaning (Step 5-13 of 24)

5 Put on protective gloves and eye wear.

6 Make sure the disinfectant is mixed according to the instructions on the disinfectant bottle label or according to the mix ratio stated in the shower panel *IFU*.

7 Spray disinfectant on the *Concerto* shower trolley. Use a brush and scrub thoroughly, especially on handles and hand control.

8 Rinse the *Concerto* shower trolley thoroughly with water approx. 25 °C (77 °F) until all the disinfectant has been removed.

9 Spray disinfectant on the removed parts, the drainage hole in the mattress and the drainage outlet. Use a brush soaked in disinfectant for cleaning, scrub thoroughly.

10 Rinse the removed parts, the drainage hole in the mattress and the drainage outlet, thoroughly with water until all the disinfectant has been removed.

11 Soak a cloth in disinfectant and wipe all other areas such as chassis.

12 Wet a new cloth with water and remove all traces of disinfectant on other areas. The cloth must occasionally be rinsed in running water when removing disinfectant.

13 If the disinfectant cannot be removed, spray water on the affected part and wipe off with disposable towels. Repeat until all of the disinfectant has been removed.

Disinfection (Step 14-24 of 24)

14 Spray disinfectant on the *Concerto* shower trolley.

15 Allow a disinfection time according to the instructions on the disinfectant bottle label.

16 Spray disinfectant on the removed parts, the drainage hole in the mattress and the drainage outlet.

17 Allow a disinfection time according to the instructions on the disinfectant bottle label.

18 Soak a cloth in disinfectant and wipe all other areas such as chassis.

19 Allow a disinfection time according to the instructions on the disinfectant bottle label.

20 Spray or shower water approx. 25 °C (77 °F) and wipe with a clean cloth to remove all traces of the disinfectant on the *Concerto* shower trolley. The cloth should occasionally be rinsed in running water during removal of disinfectant.

21 Spray or shower water approx. 25 °C (77 °F) and wipe with a clean cloth to remove all traces of the disinfectant on the removed parts, the drainage hole in the mattress and the drainage outlet. The cloth should occasionally be rinsed in running water during removal of disinfectant.

22 Spray or shower water approx. 25 °C (77 °F) and wipe with a clean cloth to remove all traces of the disinfectant on remaining areas, such as chassis. The cloth should occasionally be rinsed in running water during removal of disinfectant.

23 If the disinfectant cannot be removed, spray water on the affected part and wipe off with disposable towels. Repeat until all of the disinfectant has been removed.

24 Let all parts dry.

Battery Instructions

WARNING

To avoid bodily injury, do NOT crush, puncture, open, dismantle or otherwise mechanically interfere with the battery.

- **Should the battery casing crack and cause contents to come in contact with skin or clothing, rinse immediately with plenty of water.**
- **If contents come in contact with the eyes, rinse immediately with plenty of water and seek medical attention.**
- **Inhalation of the contents can cause respiratory irritation. Provide fresh air and medical attention.**

- Be careful not to drop the battery.
- Contact the appropriate local authority for advice when disposing of batteries.
- Check label on the battery.

Storage of Batteries

- The battery is delivered charged but we recommend you recharge the battery when received due to a slow self discharge.
- This battery will slowly self discharge when not used.
- A battery not in use should be stored in a temperature range of -0 °C (32 °F) to +30 °C (86 °F).
- For maximum battery performance do not store the battery above 50 °C (122 °F).

Charging Intervals

- To prolong the life of the battery, charge it at regular intervals, i.e. every night.
- If the *Concerto* shower trolley is used frequently, it is recommended to use two batteries, one in operation and one as a stand-by in the charger.
- It's recommended that a battery not in use is left in the charger. There is no risk of overcharging the battery.

Battery Service Life

Make sure to always have two well functional batteries, one to use and one in storage.

If using a freshly charged battery and the battery indicator starts to flash and sound after only a few activities are carried out, it is time to order a new battery.

NOTE
To avoid loss of operation, charge the battery when the warning LED lamp is lit.

NOTE
The battery can be left in the charger unit even if it is fully charged without being damaged.

Low Charge Warning

The low charge battery warning LED lamp is placed on the cover of the hydraulic unit on the chassis. If the battery is running low, the warning LED will turn yellow when the buttons on the hand control are pushed. The battery should then be recharged as soon as possible.

Installation of Charger

See *NCA-X000, Battery Charger IFU*.

How to Change the Battery

See *NCA-X000 Battery Charger IFU*.

Care and Preventive Maintenance

Caregiver Obligations

The *Concerto/Basic* shower trolley is subject to wear and tear, and the following actions must be performed when specified to make sure that the product remains within its original manufacturing specification.

WARNING

To avoid malfunction resulting in injury, make sure to conduct regular inspections and follow the recommended maintenance schedule. In some cases due to heavy use of the product and exposure to aggressive environment more frequent inspections should be carried out. Local regulations and standards may be more stringent than the recommended maintenance schedule.

NOTE
Product cannot be maintained and serviced while in use with the patient.

PREVENTIVE MAINTENANCE SCHEDULE: Concerto/Basic Shower Trolley

CAREGIVER OBLIGATIONS Action/Check	Every DAY	Every WEEK	Every YEAR
Disinfect	X		
Visually check all exposed parts		X	
Visually check mechanical attachments		X	
Perform functionality test		X	
Check hand control and cable (*Concerto* Electric shower trolley)		X	
Check and clean castors		X	
Visually check battery and charger (*Concerto* Electric shower trolley)		X	
Check mattress and head cushion/wedged pillow		X	
Yearly checks by qualified personnel only			X

WARNING

To avoid injury to both patient and caregiver, never modify the equipment or use incompatible parts.

Caregiver Obligations

Caregiver obligations shall be carried out by personnel with sufficient *Concerto/Basic* shower trolley knowledge following the instructions in this *IFU*.

Every day

Disinfect

- The *Concerto/Basic* shower trolley has to be disinfected immediately after usage. Standard disinfectant and shampoos should be used in **recommended concentrations**. For further cleaning/disinfecting instructions see section *Cleaning and Disinfection Instructions on page 34.*

Every week

Visually check all exposed parts

- Especially check where personal contact is made by either the patient or caregiver. Make sure no cracks or sharp edges have developed that could cause the patient or caregiver injury or that has become unhygienic. **(See Fig. 1)**

- Check drainage hose with all parts. Replace damaged parts. **(See Fig. 2)**

Check mechanical attachments (*Concerto* shower trolley)

- Tilt the stretcher. Visually check the two bolts holding the stretcher to the chassis. No gaps are allowed. **(See Fig. 3)**

- When tilted check for cracks in the stretcher. **(See Fig. 4)**

Continue with the steps on the next page.

Fig. 1

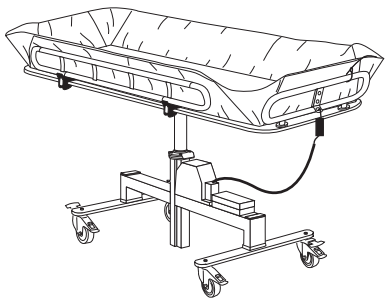

Fig. 2

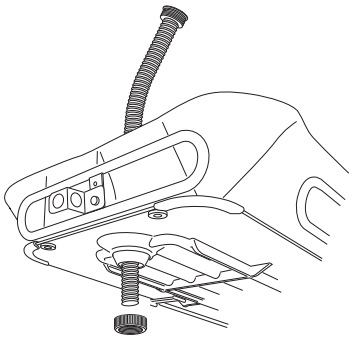

Fig. 3

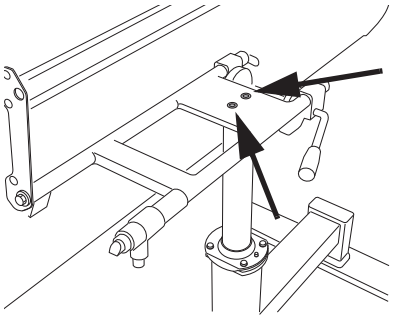

Fig. 4

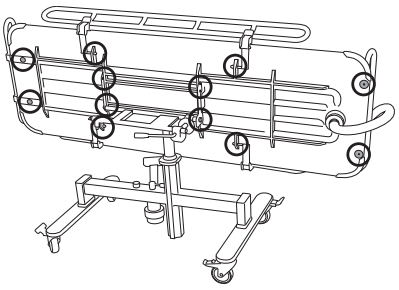

Fig. 5

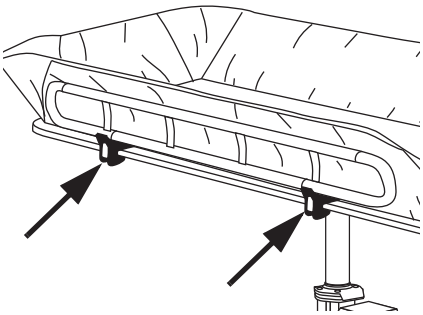

Fig. 6

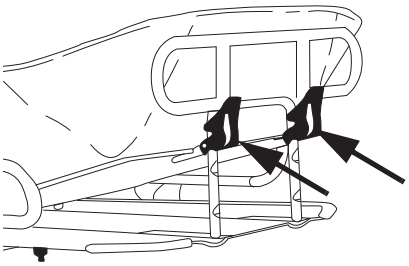

Fig. 7

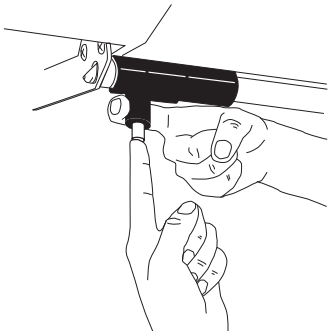

Fig. 8

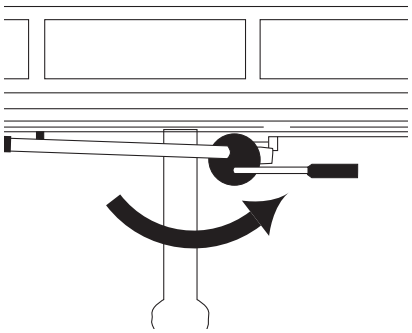

Perform functionality test, check:

- Catches on the side supports **(See Fig. 5)**
- Back support catches **(See Fig. 6)**
- Tilt function (*Concerto* shower trolley) **(See Fig. 7)**
- Horizontal lock (*Concerto* shower trolley) **(See Fig. 8)**

  Make sure the hydraulic system is working smoothly (raising and lowering)

Continue with the steps on the next page.

Fig. 9

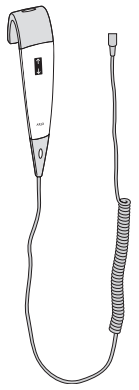

Fig. 10

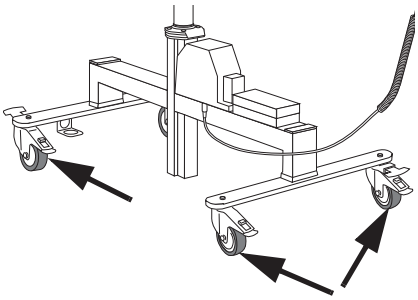

Fig. 11

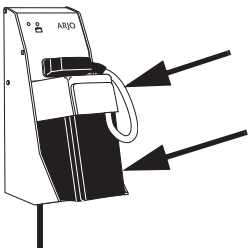

Fig. 12

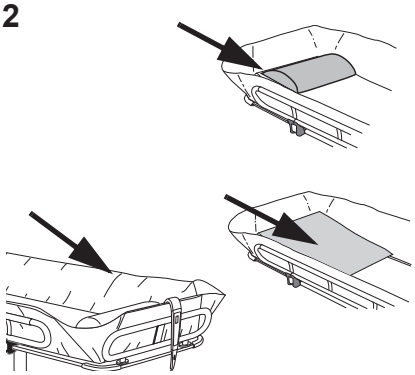

Check hand control and cable (*Concerto* electric shower trolley)

- Visually check the condition of the hand control and its cable. **(See Fig. 9)**

Check and clean castors

- Check that the castors are properly fixed and are rolling and swivelling freely. Clean with water (the function can be affected by soap, hair, dust and chemicals from floor cleaning). Check brakes and straight steering devices. **(See Fig. 10)**

Visually check battery and charger (*Concerto* electric shower trolley)

- Visually check the condition of the battery charger, its cable and the battery. Withdraw and replace immediately if damaged. **(See Fig. 11)**

Check the mattress and head cushion/wedged pillow

- Make sure there are no cracks or tears that would allow water to get into the filling. If there is such damage, replace damaged parts to avoid cross-infection. **(See Fig. 12)**

Continue with the steps on the next page.

Yearly Checks by Qualified Personnel Only

The *Concerto* shower trolley must be serviced once a year in accordance with the *Maintenance and Repair Manual*.

WARNING

To avoid injury and/or unsafe product, the maintenance activities must be carried out at the correct frequency by qualified personnel using correct tools, parts and knowledge of procedures. Qualified personnel must have documented training in maintenance of this device.

NOTE

All Caregiver Obligations are to be checked when performing the Qualified Personnel Service. For details, see separate service instructions.

FOR UK ONLY: LOLER and PUWER legislation requires 6 monthly thorough examination and annual service, or an alternative scheme, carried out by a competent person.

Troubleshooting

Troubleshooting *Concerto* Electric Shower Trolley

NOTE
If the product does not work as intended, immediately contact your local Arjo representative for support.

PROBLEM	ACTION
The *Concerto* Electric raises or descends after the hand control buttons are released.	Activate the emergency stop button and pull the battery out. Remove the patient from *Concerto Electric* and contact qualified personnel.
The *Concerto* Electric does not raise or descend when the hand control buttons are pressed.	1 Make sure the emergency stop button is inactivated by turning the red knob clockwise. 2 Make sure that the battery is fully engaged in the battery compartment. 3 Make sure that the battery is charged. **WARNING** **To avoid injury, make sure that the patient is not left unattended at any time.**
The *Concerto* Electric is hard to manoeuvre during transport.	1 Make sure all brakes are released. 2 Make sure all castors roll and turn freely. 3 If nothing of the above helps, remove the patient from *Concerto Electric* and contact qualified personnel.
The *Concerto* Electric is making abnormal sounds during lifting or transport.	Remove the patient from the *Concerto Electric* and contact qualified personnel.
ALARM	**ACTION**
A yellow LED light on the chassis cover, next to the battery holder, continuously lights up when *Concerto* Electric is being raised.	The battery needs charging - complete the transfer operation in progress and change to a fully charged battery. **WARNING** **To avoid injury, make sure that the patient is not left unattended at any time.**
Only a few activities are carried out before the battery indicator will flash and sound.	Replace the battery with a fully charged one. If using a freshly charged battery and the battery indicator starts to flash and sound after only a few activities are carried out, it is time to order a new battery.

Troubleshooting *Concerto* Hydraulic and Basic Shower Trolley

PROBLEM	ACTION
The *Concerto/Basic* shower trolley does not raise when the pedal is being pumped.	Make sure that *Concerto/Basic* shower trolley is not in its highest position.
The *Concerto/Basic* shower trolley does not descend when the pedal is pressed down.	Make sure that *Concerto/Basic* shower trolley is not in its lowest position.
The *Concerto/Basic* shower trolley does not raise or descend when the pedal is being used.	Remove the patient from the *Concerto/Basic* shower trolley and contact qualified personnel.

NOTE
If the problem can not be solved with the written troubleshooting actions, please contact qualified personnel.

Technical Specifications

General	
SWL (Safe Working Load = patient + water)	175 kg (385 lbs)
Maximum patient weight	150 kg (330 lbs)
Weight *Basic*	72 kg (159 lbs)
Weight *Concerto* hydraulic shower trolley	75 kg (165 lbs)
Weight *Concerto* electric shower trolley	79 kg (174 lbs)
Maximum total weight of lift *Basic* (lift + patient + water)	247 kg (544 lbs)
Maximum total weight of lift *Concerto* hydraulic (lift + patient + water)	250 kg (550 lbs)
Maximum total weight of lift *Concerto* electric (lift + patient + water)	254 kg (559 lbs)
Protection class	IP24 IP: Ingress Protection 2: Protection against insertion of figures or similar objects. 4: Water splashing against the product from any direction does not effect safety or essential performance
Pollution degree	2

Concerto Hydraulic/Basic shower trolley	
Operating force: Push force for pedal when raising stretcher	110 N
Operating force: Push force for pedal when lowering stretcher	114 N

Concerto Electric shower trolley	
Medical equipment	type
Operating force: Push button on the hand control	3.0 N
Hand control Protection class	IP X7 IP: Ingress Protection X: The protection against contact and ingress of objects is not specified for this product. 7: Immersion up to 1 m of the product does not effect safety or essential performance
Lift nominal voltage	12V DC
Battery No. 102193	sealed lead-acid
Battery charger	NCA 1000 - EU (Europe) NCA 2000 - GB (Great Britain) NCA 3000 - CH (Switzerland) NCA 4000 - US (USA) NCA 6000 - AU (Australia)
Battery capacity	6.5 Ah
Battery voltage	12 V DC
Maximum duty cycle- Lift actuator	ED: 1 minute ON, 9 minutes OFF
Sound Level	70 dB (A)
Motor power	200 VA

Allowed Combination	
The *Concerto* shower trolley integrate with the following Arjo products	Maxi Twin, Maxi Move, Maxi Sky, Maxi Sliding Sheet
No other combinations are allowed	

Operating, Transport and Storage	
Temperature	+10 °C to + 40 °C (+50 to +104 °F) Operating -20 °C to +70 °C (-4 °F to +158 °F) Transport -20 °C to +70 °C (-4 °F to +158 °F) Storage
Humidity	15-93% at +20 °C (+68 °F) Operating 10-80% at +20 °C (+68 °F) Transport 10-80% at +20 °C (+68 °F) Storage
Atmospheric pressure	800 hPa to 1060 hPa Operating 500 hPa to 1100 hPa Transport 500 hPa to 1100 hPa Storage

Recycling	
Package	Wood and corrugated cardboard recyclable

End of Life Disposal

- All batteries in the product must be recycled separately. Batteries are to be disposed in accordance with national or local regulations.
- Slings including stiffeners/stabilizers, padding material, any other textiles or polymers or plastic materials etc. should be sorted as combustible waste.
- Lift systems having electrical and electronic components or an electrical cord should be disassembled and recycled per Waste of Electrical and Electronic Equipment (WEEE) or in accordance with local or national regulation.
- Components that are primarily made up of different kinds of metal (containing more than 90% metal by weight) for example sling bars, rails, upright supports, etc., should be recycled as metals.

Dimensions

Concerto hydraulic shower trolley

Tilted lowest position

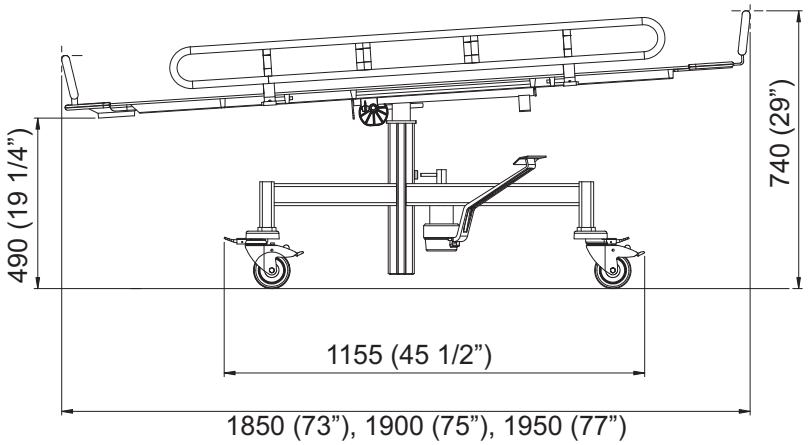

mm (inches)

Stroke: 320 (12 1/2”)

Tilted Highest Position

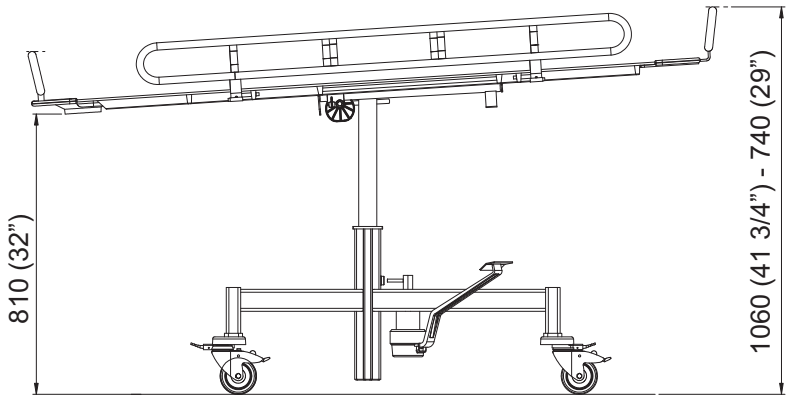

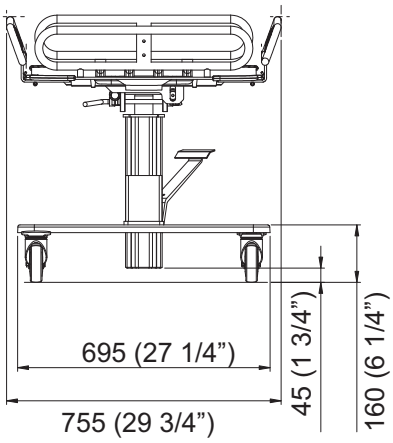

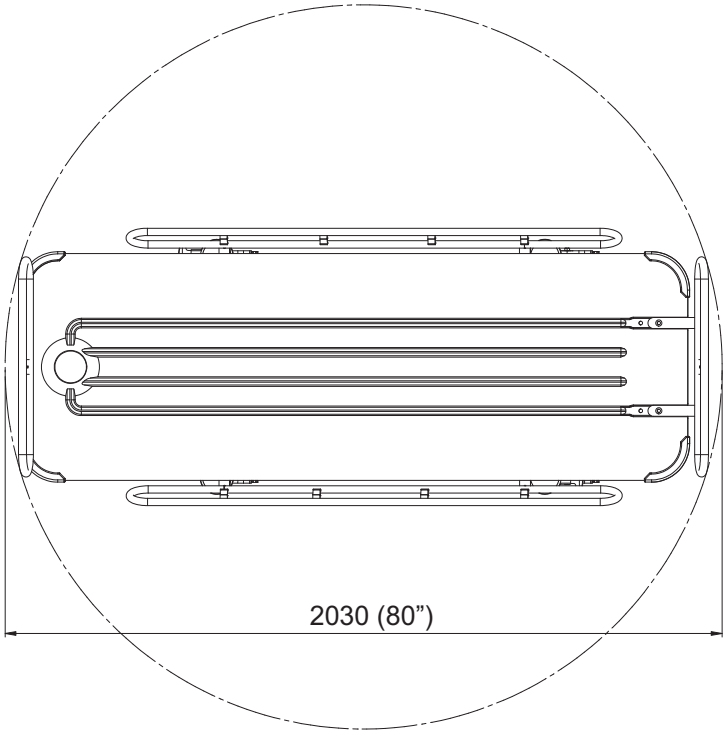

Concerto electric shower trolley

Tilted lowest position

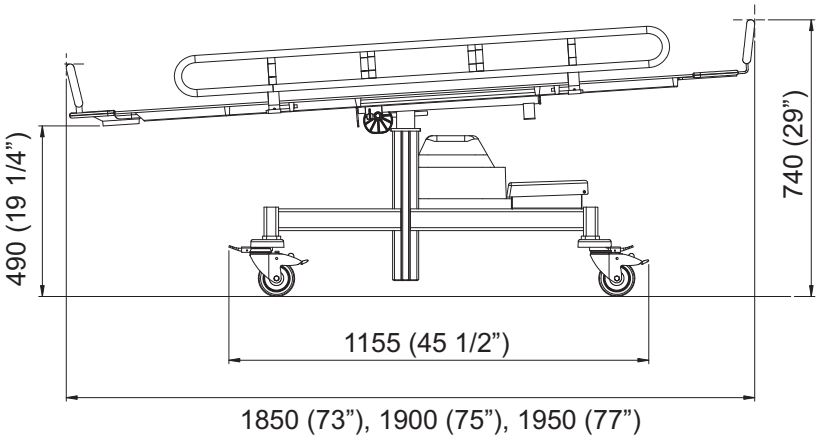

mm (inches)

Stroke: 300 (11 3/4”)

Tilted Highest Position

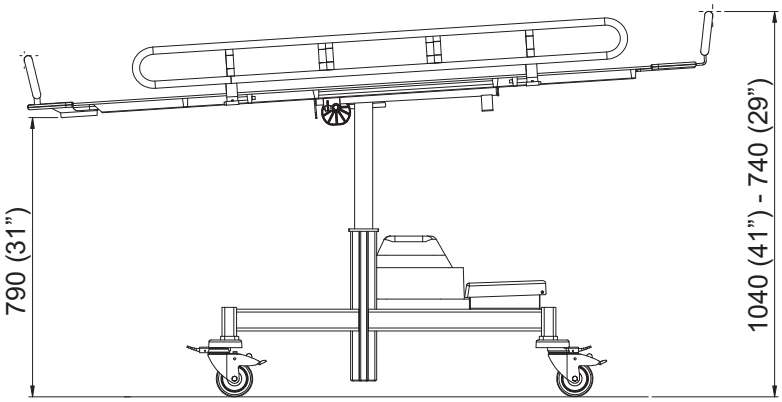

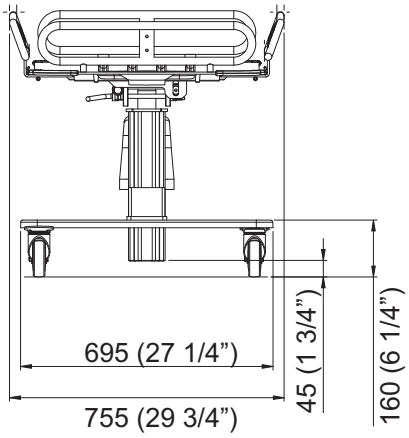

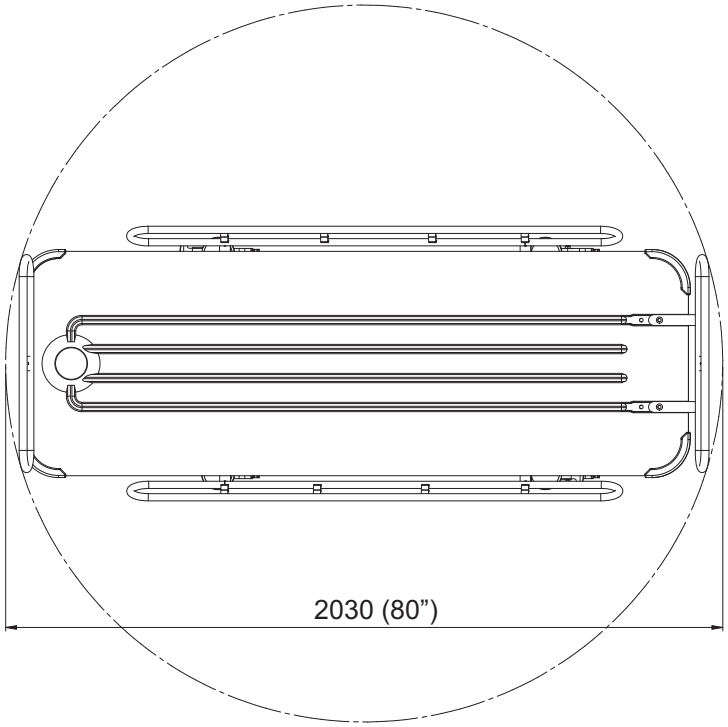

Labels

Label explanation

Battery Label	States safety and environmental information for the battery.
Data Label	States technical performance and requirements, e.g. Input Power, Input Voltage and maximum Patient Weight etc.
Identification Label	States the product identification, serial number and year and month of manufacturing.

Symbol explanation

SWL	Safe Working Load
Max patient weight	Defines the maximum weight of the patient.
	Stroke - Defines the lifting height range of the lift
IP 24	Protection class against splashing water
12 V DC	Supply voltage
200 VA	Maximum Motor power
	Fuse F1: T15 AL 250 V
6.5Ah	Capacity
	Type BF, Applied part: protection against electrical shock in accordance with EN/IEC 60601-1.
	Read the *IFU* before use
	Separate electrical and electronic components for recycling in accordance with the European Directive 2012/19/EU
Mode of operation (ED)	Mode of operation for Hi/Lo function: ED maximum 10%; Maximum 1 minute ON; Minimum 9 minutes OFF

	CE marking indicating conformity with European Community harmonised legislation
	Indicates the product is a Medical Device according to EU Medical Device Regulation 2017/745
	TÜV marking. The lift has been safety tested in accordance with the Approvals and List of Standards.
	A battery is the power source of this equipment.
1 min on / 9 min off	Mode of operation for Hi/Lo function: ED maximum 10%; Maximum 1 minute ON; Minimum 9 minutes OFF
	Total mass of equipment including its safe working load.
	Name and address of the manufacturer
	Manufacturing date

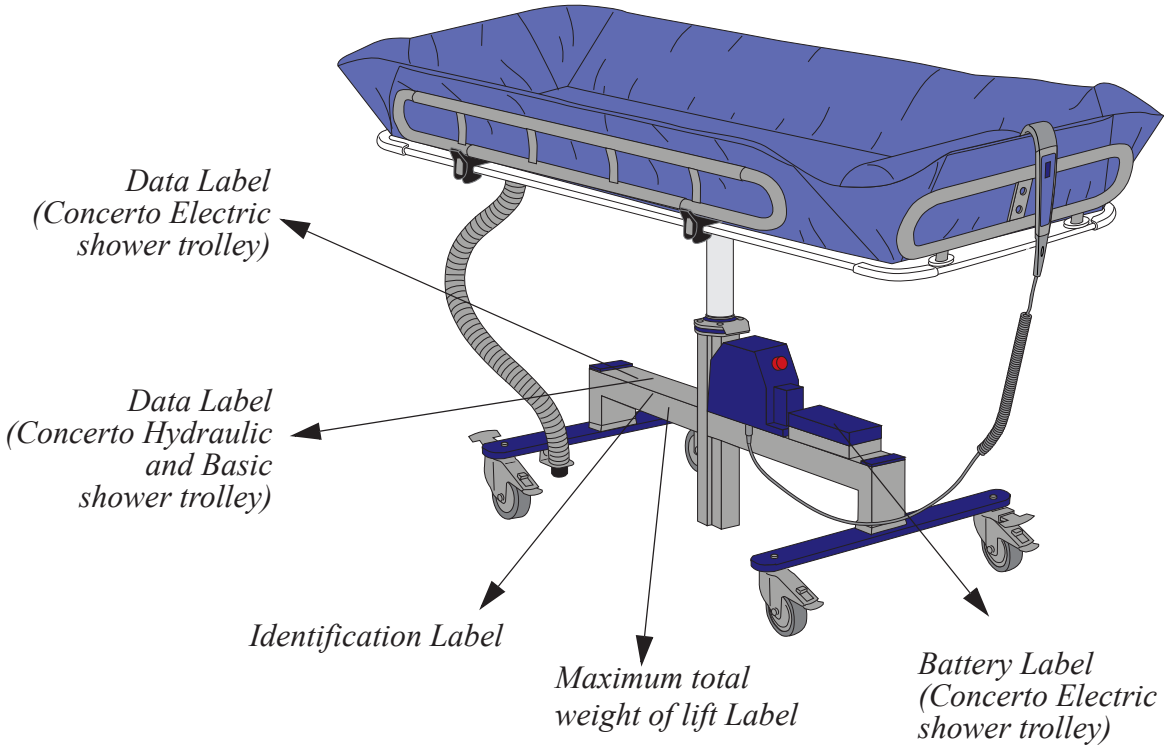
Data Label
(Concerto Electric
shower trolley)
Data Label
(Concerto Hydraulic
and Basic
shower trolley)
Identification Label
Maximum total
weight of lift Label
Battery Label
(Concerto Electric
shower trolley)

Approvals and List of Standards

CERTIFICATE	STANDARDS
EN/IEC 60601-1:2005 AMD1:2012	Medical Electrical Equipment - Part 1: General Requirements for Basic Safety and Essential Performance
ANSI/AAMI ES60601-1 (2005) AMD1 (2012)	Medical Electrical Equipment - Part 1: General Requirements for Basic Safety and Essential Performance
CAN/CSA-C22.2 No. 60601-1:14	Medical Electrical Equipment - Part 1: General Requirements for Basic Safety and Essential Performance
ISO 10535:2006	Hoists for the transfer of disabled persons -- Requirements and test methods
EN/IEC 60601-1-11:2015	Requirements for medical electrical equipment and medical electrical systems used in the home healthcare environment

Electromagnetic Compatibility

Product has been tested for compliance with current regulatory standards regarding its capacity to block EMI (electromagnetic interference) from external sources.

Some procedures can help reduce electromagnetic interferences:

- Use only Arjo cables and spare parts to avoid increased emissions or decreased immunity which can compromise the correct functioning of the equipment.
- Ensure that other devices in patient-monitoring and/or life-support areas comply to accepted emissions standards.

WARNING

Wireless communications equipment such as wireless computer network devices, mobile phones, cordless telephones and their base stations, walkie-talkies, etc. can affect this equipment and should be kept at least 1.5m away from the equipment.

Intended Environment: Home Healthcare Environment and Professional Healthcare facility environment.

Exceptions: HF Surgical Equipment and the RF Shielded room of an ME SYSTEM for magnetic resonance imaging

WARNING

Use of this equipment adjacent to or stacked with other equipment should be avoided because it could result in improper operation. If such use is necessary, this equipment and the other equipment should be observed to verify that they are operating normally.

Guidance and manufacturer's declaration – electromagnetic emission		
Emission test	**Compliance**	**Guidance**
RF emissions CISPR 11	Group 1	This equipment uses RF energy only for its internal functions. Therefore its RF emissions are very low and are not likely to cause any interference in nearby electronic equipment.
RF emissions CISPR 11	Class B	This equipment is suitable for use in all establishments, including domestic establishments and those directly connected to the public low voltage power supply network that supplies buildings used for domestic purposes.

Guidance and manufacturer's declaration – electromagnetic immunity			
Immunity test	**IEC 60601-1-2 test level**	**Compliance level**	**Electromagnetic environment – guidance**
Electrostatic discharge (ESD) EN 61000-4-2	±2kV, ±4kV, ±8kV, ±15kV air ±8kV contact	±2kV, ±4kV, ±8kV, ±15kV air ±8kV contact	Floors should be wood, concrete or ceramic tile. If floors are covered with synthetic material, the relative humidity should be at least 30%.
Conducted disturbances inducted by RF fields EN 61000-4-6	3V in 0,15 MHz to 80 MHz 6V in ISM and amateur radio bands between 0,15 MHz and 80 MHz 80% AM at 1 kHz	3V in 0,15 MHz to 80 MHz 6V in ISM and amateur radio bands between 0,15 MHz and 80 MHz 80% AM at 1 kHz	Portable and mobile RF communications equipment should be used no closer to any part of the product, including cables, than 1.0m, if the transmitter's output power rating exceeds 1W[a] Field strengths from fixed RF transmitters, as determined by an electromagnetic site survey, should be less than the compliance level in each frequency range[b] Interference may occur in the vicinity of equipment marked with this symbol:
Radiated RF electromagnetic field EN 61000-4-3	Home Healthcare environment 10 V/m 80 MHz to 2,7 GHz 80% AM at 1 kHz	Home Healthcare environment 10 V/m 80 MHz to 2,7 GHz 80% AM at 1 kHz	
Proximity fields from RF wireless communications equipment EN 61000-4-3	385 MHz - 27 V/m 450 MHz - 28 V/m 710, 745, 780 MHz - 9V/m 810, 870, 930 MHz - 28 V/m 1720, 1845, 1970, 2450 MHz – 28 V/m 5240,5500, 5785 MHz - 9V/m	385 MHz - 27 V/m 450 MHz - 28 V/m 710, 745, 780 MHz - 9V/m 810, 870, 930 MHz - 28 V/m 1720, 1845, 1970, 2450 MHz - 28 V/m 5240,5500, 5785 MHz - 9V/m	
Electrical fast transient/burst EN 61000-4-4	±1kV SIP/SOP port 100 kHz repetition frequency	±1kV SIP/SOP ports 100 kHz repetition frequency	
Power frequency Magnetic field EN 61000-4-8	30 A/m 50 Hz or 60 Hz	30 A/m 50 Hz	Power frequency magnetic fields should be at levels characteristic of a typical location in a typical commercial or hospital environment.

[a] Field strengths from fixed transmitters, such as base stations for radio (cellular/cordless) telephones and land mobile radios, amateur radio, AM and FM radio broadcast and TV broadcast cannot be predicted theoretically with accuracy. To assess the electromagnetic environment due to fixed RF transmitters, an electromagnetic site survey should be considered. If the measured field strength in the location in which the product is used exceeds the applicable RF compliance level above, the product should be observed to verify normal operation. If abnormal performance is observed, additional measures may be necessary.

[b] Over the frequency range 150 kHz to 80 MHz, field strengths should be less than 1 V/m.

Parts and Accessories

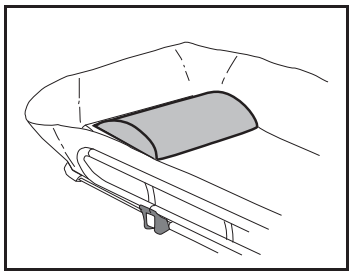

Head Cushion
8231551-013

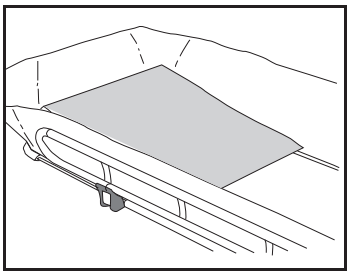

Wedge Pillow
100880-01

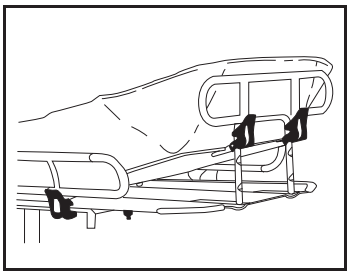

Adjustable backrest
100806-03

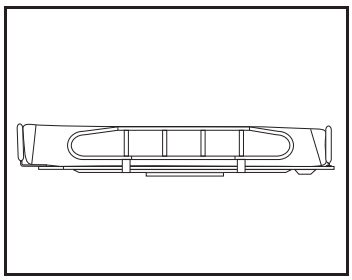

Extra high side supports
100805-03

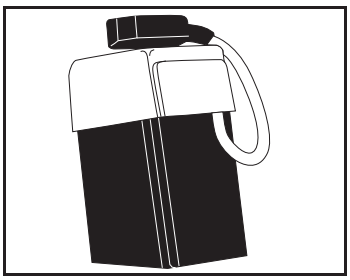

Extra battery 102193

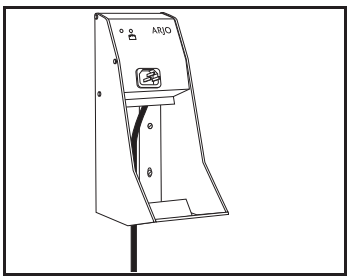

Battery charger
NCAX000-XX

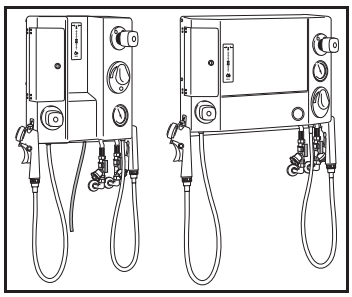

Shower Panel
BCA 1204/1202/1201-04
BCA 1214/1212/1211-04
BCA 1224/1222/1221-04

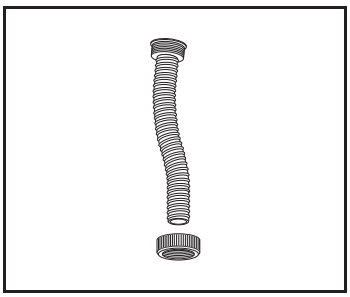

Drainage Hose 100828
1, 1.5, 2 or 3 m

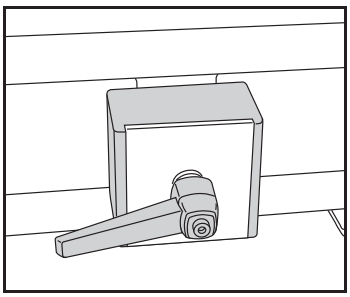

Drip-feed bottle holder
100830

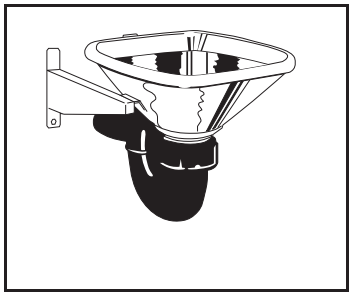

Sink
BDA0815/0816-90

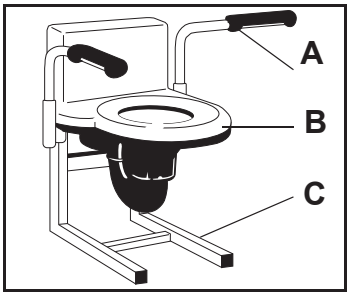

Flush sink BDA 0891-04
A: Support handle
100837
B: Sink BDA0890-04
C: Support frame
100836

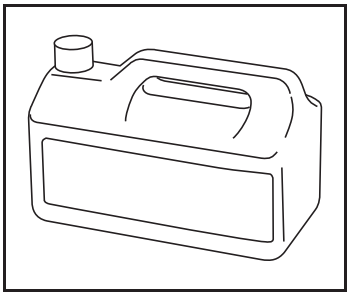

For disinfectant contact
the Arjo local
representative