Assembly Instructions

1. Remove the frame, backrest set, and headrest from carton
2. Insert the casters into the frame and use “E” clips to secure them in place.

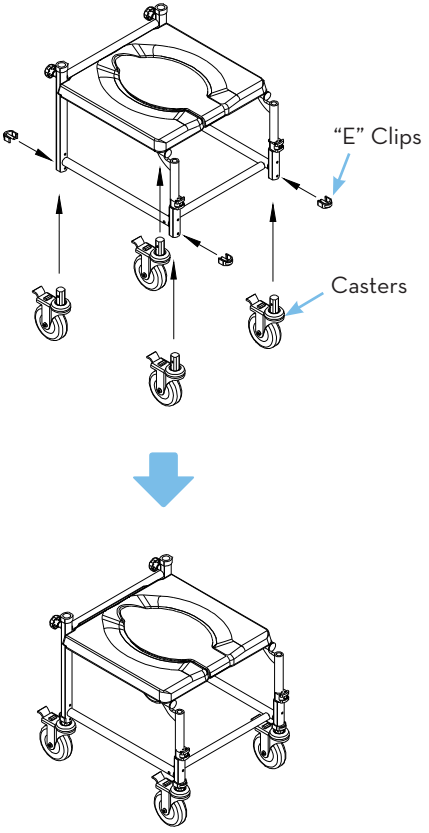

3. Assemble the footrests by inserting the footrests into the top of the front legs from the outside of the frame. Once inserted, turn the footrests inward until they lock in position.

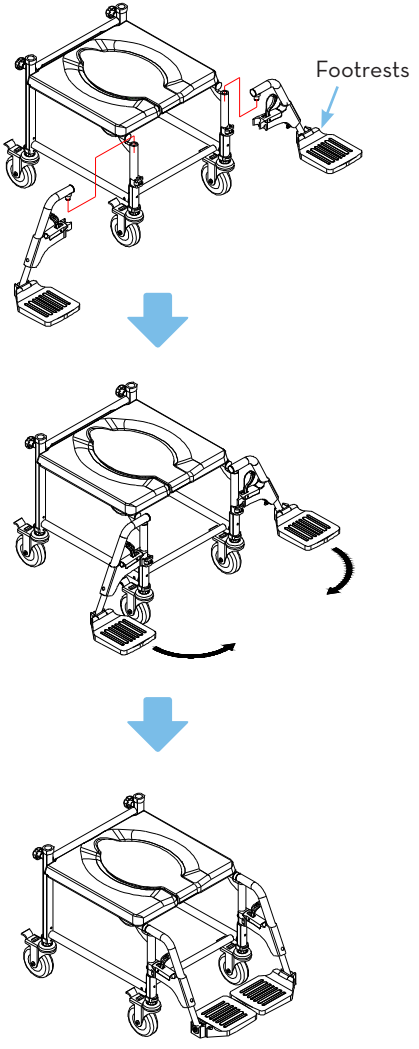

4. Assemble the backrest by inserting the supporting poles into the back of seat frame. Secure in place using the lock knobs provided.

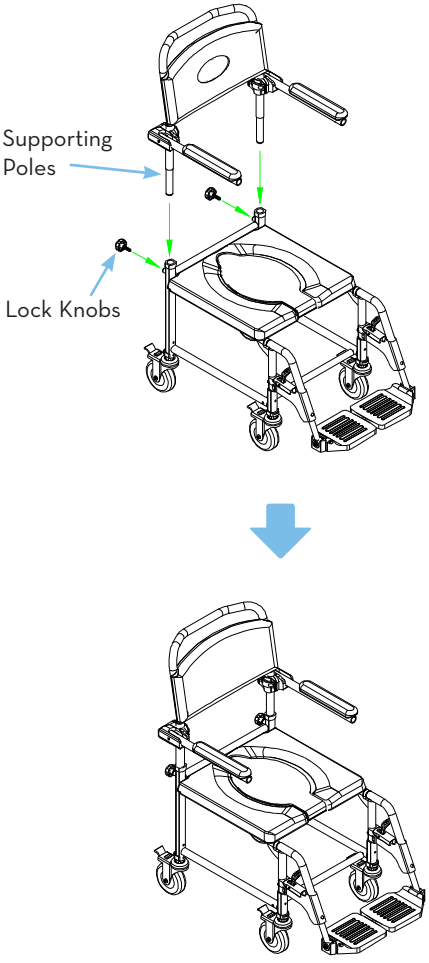

5. The angle of footplate is adjustable to fit the user. Using the allen key, loosen the screws by turning counter-clockwise, adjust the footplate to a suitable angle of footplate and re-tighten.

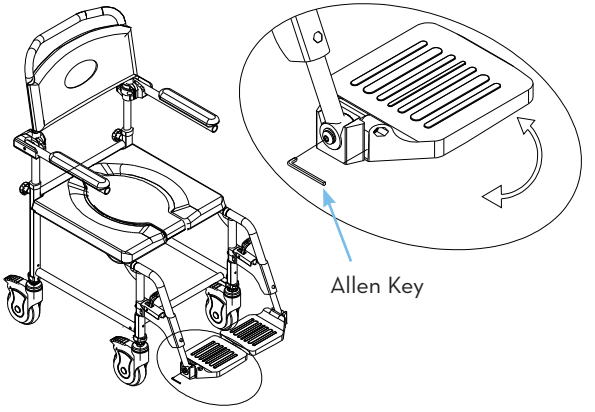

6. Slide commode bucked underneath seat into receptacle.
7. Remove cover over commode bucket before use.