maintenance tips

maintaining your transport chair

Proper care and maintenance is important in order to keep your Transport Chair in good working condition. Be sure that your chair is in proper working condition at all times. A qualified dealer or repair center (wheelchair rental dealer) should be consulted for periodic inspections and repairs.

1. At least once a week, wipe off chrome using a clean soft cloth. If the chair is exposed to moisture, dry the chair immediately. The metal parts of the chair should be polished once a month with an auto wax.

2. Clean the upholstery with a mild soap solution, rinse and wipe dry. Worn or torn upholstery should be replaced promptly as it may not support your body weight.

3. Inspect the wheels at least once a month. Correct any side play by loosening the lock nut on the axle, then tighten the axle just enough to remove side play.

4. Solid rubber tires require limited upkeep, but need to be cleaned periodically with a damp cloth. Solid rubber tires need to be replaced if they become cracked or severely worn.

drive
MEDICAL DESIGN & MANUFACTURING

lifetime limited warranty

Your Drive brand product is warranted to be free of defects in materials and workmanship for the lifetime of the original consumer purchaser.

This device was built to exacting standards and carefully inspected prior to shipment. This Lifetime Limited Warranty is an expression of our confidence in the materials and workmanship of our products and our assurance to the consumer of years of dependable service.

In the event of a defect covered by this warranty, we will, at our option, repair or replace the device.

This warranty does not cover device failure due to owner misuse or negligence, or normal wear and tear. The warranty does not extend to non-durable components, such as rubber accessories, casters, and grips, which are subject to normal wear and need periodic replacement.

If you have a question about your Drive device or this warranty, please contact an authorized Drive dealer.

drive
MEDICAL DESIGN & MANUFACTURING

transport chair

drive
MEDICAL DESIGN & MANUFACTURING

transport chair

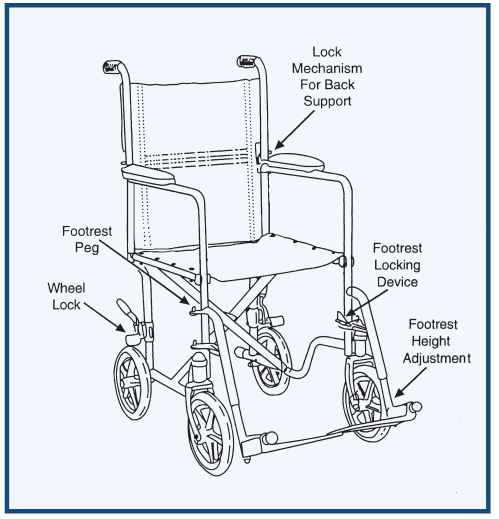

weight capacity 300 lbs

Item # TR19SV-DDA Shown

It is important for the attendant to be familiar with proper assisting procedures in any situation that requires the use of the Transport Chair. Safety is the Key consideration. Consult your physician, nurse of physical therapist to determine methods most suitable for your individual needs and abilities.

Note: The transport chair does not conform to Federal Standards for automobile seating and should not be used as a seat in a motor vehicle.

operating tips

how to operate your transport chair:

Your Transport Chair Dealer (Wheelchair rental Dealer) can assist you in making adjustments and provide you with operational information.

1. To Open the chair, tilt to one side and push down on seat rails.
2. Lift back support to upright position. The lock to secure the back will engage automatically. To fold down and store, pull up on locks simultaneously, and carefully fold down the back support.
3. To attach footrests, align the holes on the footrest arm with the pegs on the frame of the Transport chair. (See Diagram)
4. To Adjust the length of the footrests, loosen the bolt (or knob) on the telescoping tube shaft. Tighten securely after adjustment. The lowest part of the footrest should not be less than 2 1/2 inches from the ground to permit proper clearance.
5. To remove the Swing-away footrest, release the lock. Swing outward and rearward. Simply lift up and off to remove the footrest.
6. The safety belt is already attached for use and should not be removed from the Transport Chair.

Note: The Transport Chair should not be operated without the assistance of an attendant.

safety tips

please read carefully before using your transport chair.

1. Before entering or leaving the chair, engage the dual wheel locks against the tires on both rear wheels. Make sure the front casters are in the forward position before transferring into or out of the chair.
2. Always fasten the safety belt when the transport chair is in motion.
3. Do not move forward on the seat while leaning forward out of the chair. If it is absolutely necessary to do so, make sure the front casters are in the forward position. If you are picking an object up from the floor, go past the object, and then go backwards. The casters will then swing to the forward position.
4. Leaning out of the transport chair without proper assistance could cause tipping.
5. Do not step on the foot plates when transferring, as this could cause tipping.

Note: You and your attendant should consult a qualified professional for correct techniques on ramp negotiations.