Installation and User Manual

TILT® Toilet Incline Lift – Battery Power

UNIVERSAL MOTOR MOUNT (LEFT OR RIGHT SIDE)

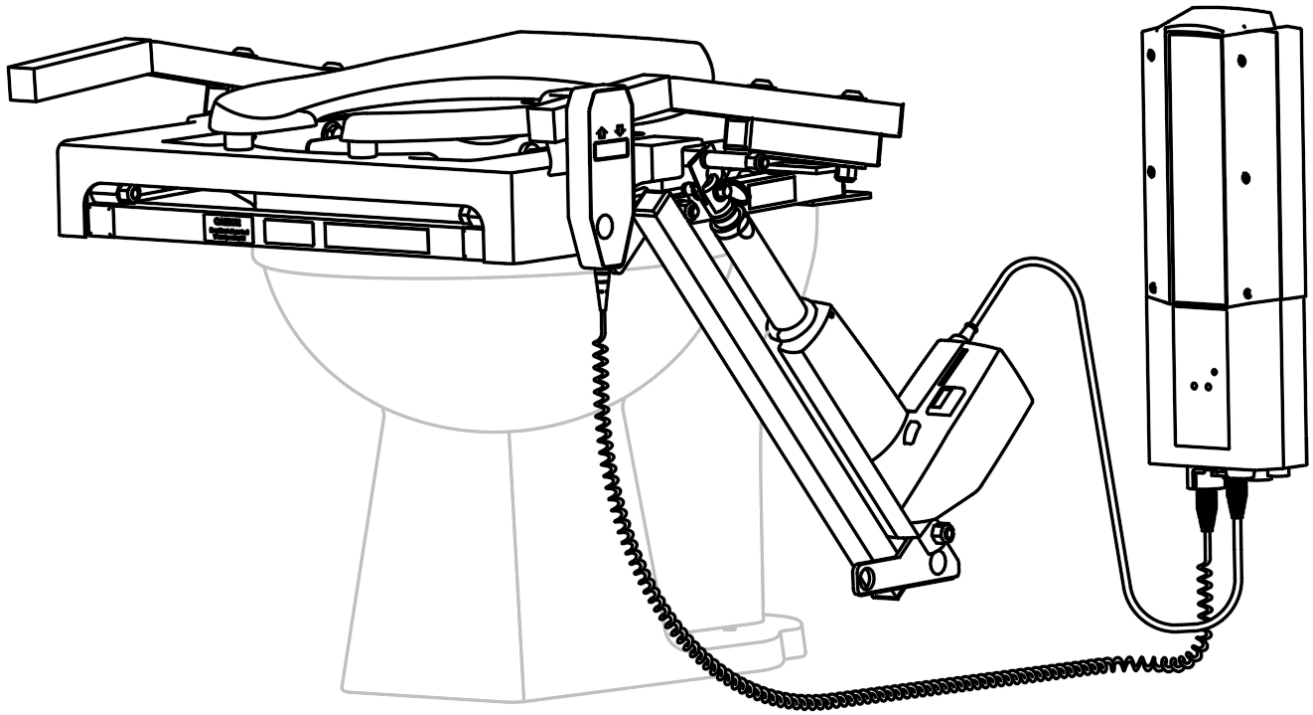

2-YEAR WARRANTY on product; 1-YEAR WARRANTY on battery.

© Homecare Products, Inc. All rights reserved.
All text and images contained in this document are proprietary and may not be shared, modified, distributed, reproduced, or reused without the express written permission of EZ-ACCESS®, a division of Homecare Products, Inc.

18591 REV 01-12-2022

TABLE OF CONTENTS

INTRODUCTION 2
SYMBOLS AND WARNINGS 3
GETTING STARTED, BOX CONTENTS, TOOLS/HARDWARE NEEDED, HARDWARE CONTENTS 4
PRODUCT OVERVIEW 5
SECTION 1: PRE-INSTALLATION 6
SECTION 2: FRAME INSTALLATION 6
SECTION 3: ACTUATOR MOUNT 7-9
SECTION 4: ACTUATOR DETAIL AND ASSEMBLY 10
SECTION 5: INSTALLING MOUNTING BRACKET AND CONTROL BOX 11
SECTION 6: BATTERY 12
SECTION 7: BATTERY CHARGING 12
SECTION 8: CONNECT ACTUATOR TO CONTROL BOX 13
SECTION 9: HANDHELD CONTROL 13
SECTION 10: POST-INSTALLATION AND BEFORE USE INSPECTION 14
SECTION 11: CLEANING / SANITATION / MAINTENANCE 14
SECTION 12: TROUBLESHOOTING 15

INTRODUCTION

- Thank you for purchasing the EZ-ACCESS® TILT® Toilet Incline Lift. The TILT is designed to provide lifting/lowering support while toileting.
- Please read these instructions entirely before installing or using your new TILT.
- After installation, it's important that you cycle - fully raise and lower - the TILT 3-4 times (without sitting on or adding any weight to the seat) to become familiar with its functionality.
- Actuator images shown are for illustrative purposes only; actual style may vary.

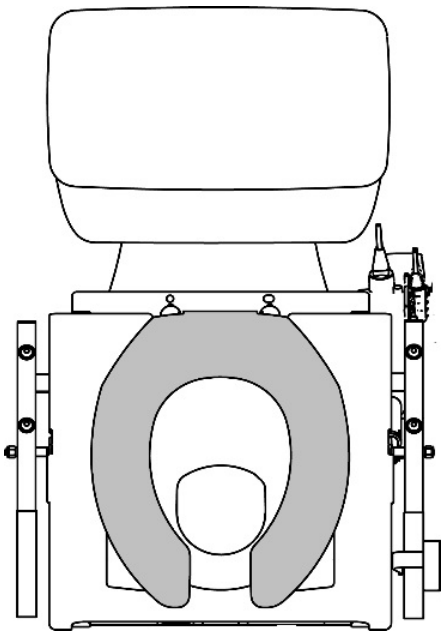

TILT® Standard Seat

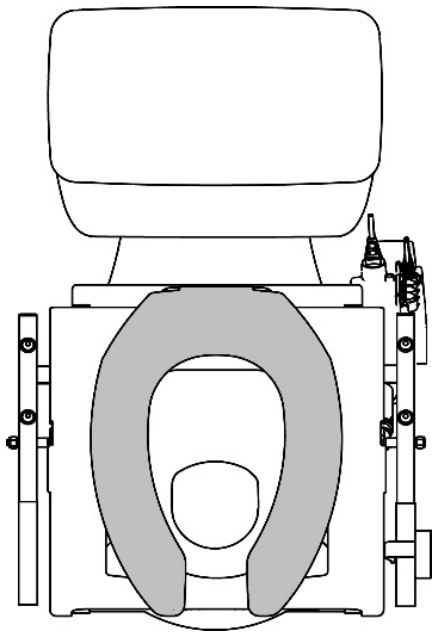

TILT® Elongated Seat

SYMBOLS

- The **WARNING** symbol indicates a potentially hazardous condition/situation. The safety warnings throughout this manual, and on your equipment, if any, are for the protection of people and property. Failure by any operator to abide by safety warnings will result in a waiver of all liabilities, loss of your warranty, and could result in equipment damage and or failure, property damage, risk of serious bodily injury, and or death. The symbol may appear in various colors and in conjunction with other symbols.
- The **NOTE** symbol indicates important information. Failure to obey all notes could result in improper operation, less-than-optimum equipment performance, and at the sole discretion of the equipment manufacturer, may void your warranty. The symbol may appear in various colors and in conjunction with other symbols.

WARNINGS

- Rated load: 325 lbs.; never exceed rated load.
- Product is non-returnable if the sealed bag containing the TILT is opened or altered.
- Use the TILT only with a qualified helper.
- Manufacturer recommends professional installation by a qualified technician.
- Read and follow all instructions and warnings prior to assembly and use. Correct installation, proper use, following instructions, and obeying warnings are necessary for safe operation.

- Understand and learn the location and function of all the features before operating.
- For use with secure, properly mounted, floor mounted toilets only.
- Observe and avoid all pinch points and always keep hands above the seat when operating the TILT.
- Ensure that there is no interference within the TILT's range of movement.
- To help prevent slipping, it is important to wear footwear with firm, non-skid soles when using the TILT.
- Remove loose rugs and make sure that the area around the TILT is free of all obstructions and moisture.
- The TILT is strictly an assist lift. The patient must have dexterity, strength, and balance in order to use the TILT safely. Non-responsive or combative patients may not be suitable for TILT usage.
- When using TILT, never let clothing contact the TILT seat; clothing can make the seat slippery and dangerous!
- Never use TILT as a chair; only sit on TILT when it is being used as intended.
- Do not use TILT for anything other than its intended purpose.
- Before and during TILT operation, ensure all hair, jewelry, shirts, ties, shoelaces, and all other forms other personal attire and ornamentation are not, and do not, hang up on anything that may create a hazard.
- Never modify the TILT or any of its components. Padded toilet seats cannot be used with the TILT.
- Periodic inspections by a qualified technician are recommended to help prevent unsafe conditions. Regularly check that all parts are in good condition and verify all hardware and other fasteners are undamaged and secure. If any part of the TILT is damaged, loose, or faulty, do not use until repairs can be made by a qualified technician.
- Do not route power cords so that they may become damaged, pinched, create trip hazards, or create other safety concerns. Check all TILT electrical cords frequently to ensure they are not worn or damaged. Stop using TILT immediately and contact your Certified Dealer or Technician if any defect is suspected.
- To reduce risk of shock and or electrical hazard, always keep all electrical components free from moisture and only use properly grounded electrical equipment, outlets, and plugs.
- Do not play on or around the TILT.
- Do not continually operate the hoist functions. The system is not designed as an exercise machine and continuous operation will cause batteries to be deeply discharged and or damage to the actuator or control box by overheating.
- Do not pull on, or otherwise exert excessive force on, the handset cable as this may break off the wires inside the cable and prevent some or all TILT operations.
- If TILT is not lifting, do not continue to repeatedly press handset buttons because the actuator has either reached its end position, the load is too great, or there is another problem.
- Maintaining all labels and manuals in legible condition is required by the TILT owner and is essential for safe operation. Contact your Certified Dealer or Technician for additional information, replacement labels and manuals, or to schedule inspections, repairs, or service.

- Information in this document is subject to change without notice.

- Before installation, ensure that there is enough space for proper TILT operation.
- Attempting to tamper with or modify any portion of the TILT will void the warranty and could create a hazardous situation.

GETTING STARTED

1. Information in this document is subject to change without notice.

2. Before installation, ensure that there is enough space for proper TILT operation (refer to 'PRE-INSTALLATION' section).
3. The TILT warranty is not transferable. Attempting to tamper with or modify any portion of the TILT will void the warranty. Using the TILT for anything other than its intended purpose will void the warranty.

BOX CONTENTS

1. Open box and inspect contents for shipping damage before use. In case of damage, do not use the TILT. Please call 1-800-451-1903 for further instructions.
2. Product is non-returnable if the sealed bag containing the TILT is opened or altered.

TOOLS/HARDWARE NEEDED

- ✓ 5/8" wrench
- ✓ 9/16" wrench
- ✓ Power drill
- ✓ 3 mm hex key
- ✓ Locking pliers
- ✓ Mounting bracket hardware
- ✓ Drill bit sized for your chosen hardware

HARDWARE CONTENTS

QTY	DESCRIPTION	VISUAL
2	PLASTIC TOWER NUT	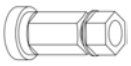
2	WASHER FLAT .375 X .875 X .06 TEFLON	
2	BOLT HEX .375-16 X 1.75 GRADE 18-8, PARTIAL THREAD	

PRODUCT OVERVIEW

REF #	DESCRIPTION
1	PLASTIC SHIELD – REMOVABLE
2	TOILET SEAT – STANDARD SEAT SHOWN
3	HANDLES WITH FOAM GRIP
4	ACTUATOR (MOTOR) – MOUNTED TO TILT FRAME
5	HANDHELD CONTROL – PUSH BUTTON DEVICE
6	DC CONTROL BOX – ATTACHES TO MOUNTING BRACKET
7	BATTERY – ATTACHES TO MOUNTING BRACKET
8	AC INPUT, DC BATTERY CHARGER
9	ACTUATOR MOUNT

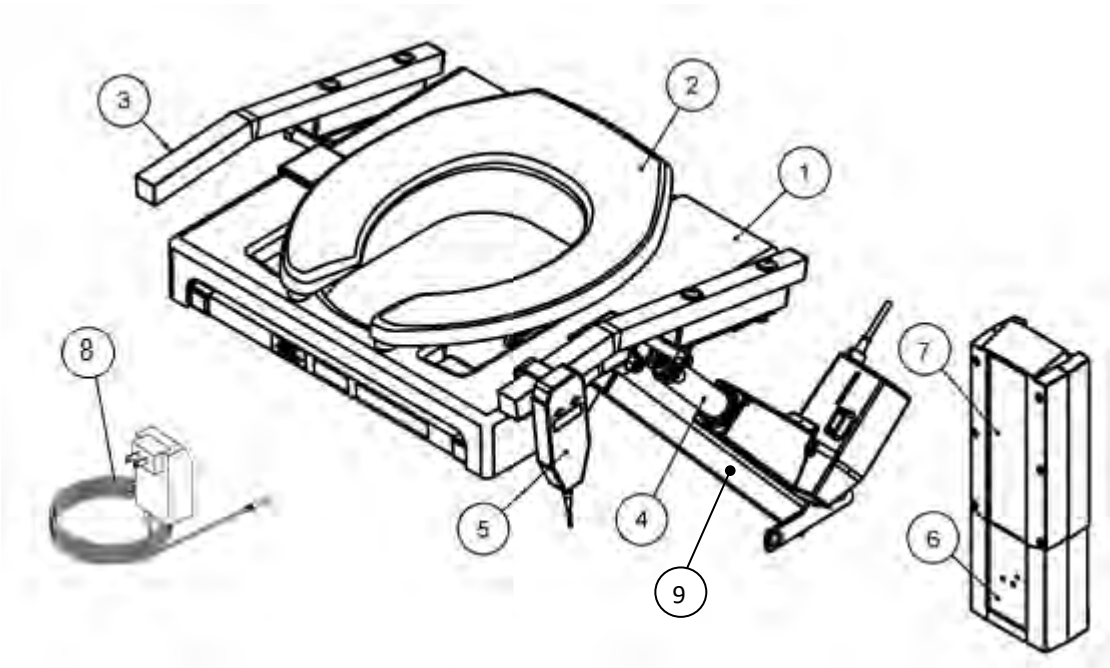

1. PRE-INSTALLATION

1.1 Before installation, ensure there is sufficient space around TILT for proper operation. The TILT frame requires 6” on either side of the toilet bowl and 7-1/2” in front of the bowl (FIG. 1).

1.2 The battery and control box require 5” x 16” wall space for mounting (protrudes 3” out from the wall).

1.3 The battery and control box will need to be mounted within a 3’ radius from the actuator (the control box cord length requires installing within that range).

1.4 Before use, fully charge the battery by plugging the charger into a properly grounded GFCI protected outlet and plugging the other end into the battery.

1.5 See ‘SECTION 7’ for further instructions.

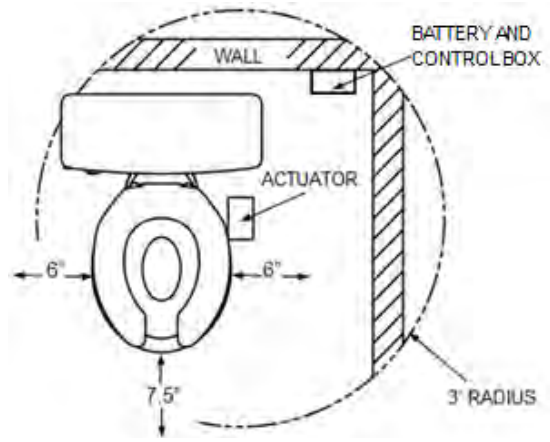

FIG. 1

2. FRAME INSTALLATION

2.1 Remove existing seat and lid from toilet bowl.

- ✋ The TILT ships with its own seat, which will replace your toilet’s current seat and lid.
- ⚠ Always use the toilet seat provided with the TILT; do not replace it with any other seat.

2.2 Set the TILT frame on the toilet, in place of the seat that was previously removed. Align two holes on the TILT’s mounting plate with the existing two holes on the toilet bowl.

- ✋ The mounting plate front holes are for a round STANDARD bowl; rear holes are for an ELONGATED bowl (FIG. 2).

2.3 Using hardware provided, place one bolt ① and washer ② through each hole in the TILT frame and through the hole on the toilet bowl. Using a 9/16” wrench, hold the top of the bolt in place, then thread the plastic tower nut ③ to the bottom side of the bolt. Hand tighten

2.3.1 Repeat the process for the second hole (FIG. 3).

2.4 Tighten each plastic tower nut ③ by tightening the snap nut ④ with a 5/8” wrench.

2.4.1 The snap nut ④ will snap from the plastic tower nut ③ once the proper tightness/torque is applied.

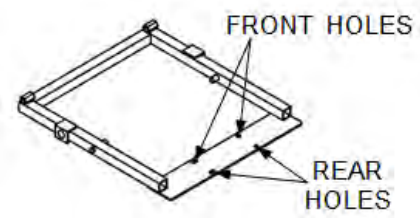

FIG. 2

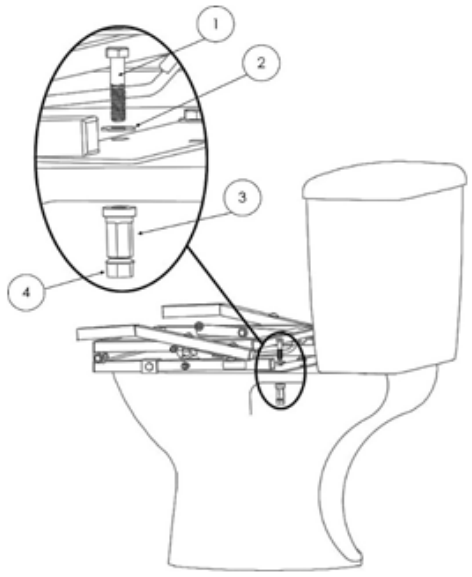

FIG. 3

3. ACTUATOR MOUNT

3.1 Once the frame is properly mounted to the toilet, carefully lift/extend the TILT by pulling the two handles forward and slightly upward (FIG. 4), until the seat is fully raised and slightly overextend (this allows the seat to stay in the "up" position while the actuator and actuator mount are installed).

3.2 The actuator mount is universal for both the left and right side of the TILT and is factory packaged configured for a left side mount. Depending on space requirements (see 'PRE-INSTALLATION section) or bathroom configuration, it may be necessary to change to a right-side mount.

- 3.2.1 Determine left/right with your back to the toilet.
- 3.2.2 For left side mount, alignment dots will be **red**; for right side they will be **green**.

FIG. 4

3.3 To switch actuator and actuator mount from the left side to right, release actuator by removing the bolt (FIG. 5) using a 9/16" wrench and locking pliers to secure the nut while backing out the bolt.

3.4 Flip actuator mount 180-degrees as shown (FIG. 6), and then replace actuator by aligning oblong hole in actuator mount between slotted tabs on actuator.

3.5 Replace nut and bolt (FIG. 7). Fasten securely.

✋ Actuator images shown are for illustrative purposes only; actual style may vary.

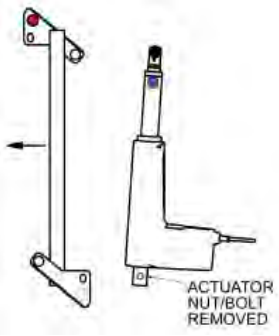

FIG. 5

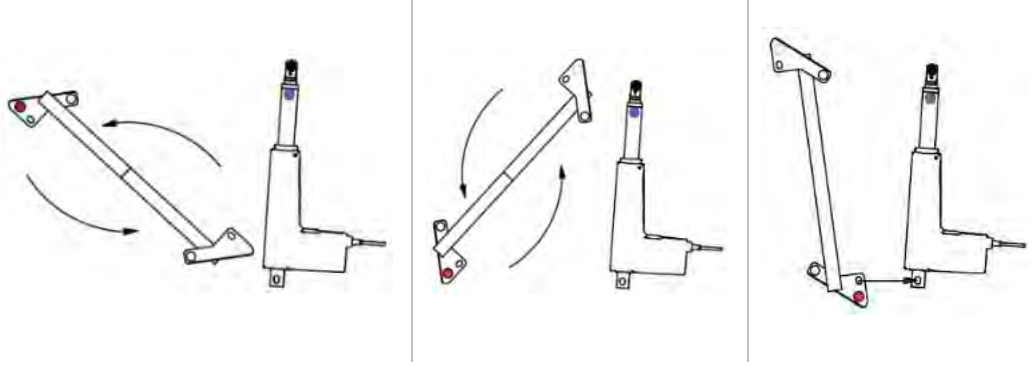

FIG. 6

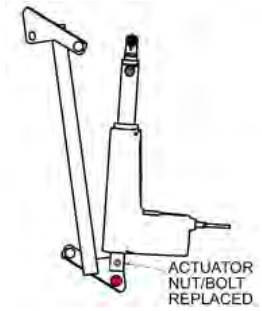

FIG. 7

3.6 For a left side mount, **red** alignment dots will be facing outward, away from the bowl (FIG. 8). For a right-side mount, **green** dots will be facing outward (FIG. 9).

✋ Actuator images shown are for illustrative purposes only; actual style may vary.

LEFT SIDE MOUNT

FRONT, INSTALLING VIEW **REVERSE VIEW**

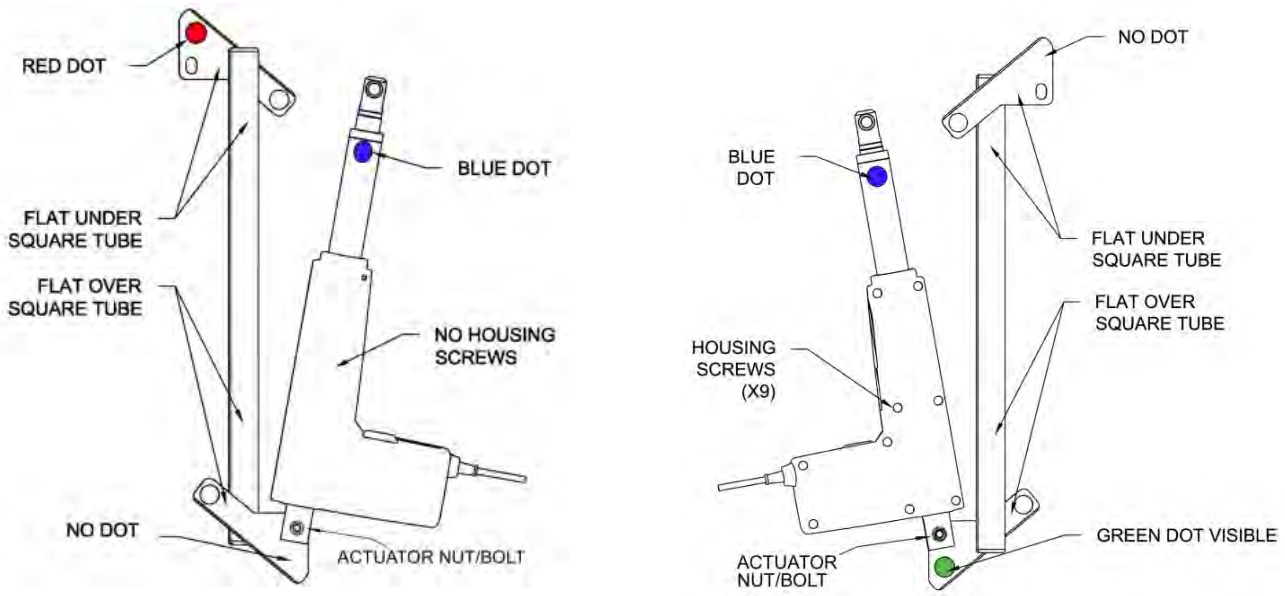

FIG. 8

RIGHT SIDE MOUNT

FRONT, INSTALLING VIEW **REVERSE VIEW**

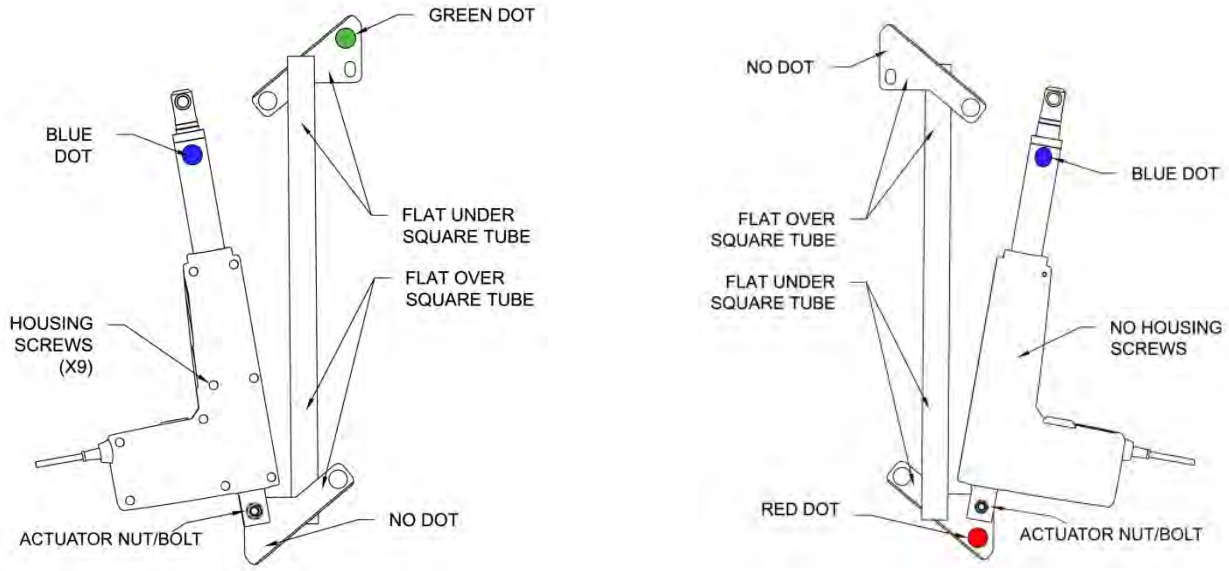

FIG. 9

3.7 Place actuator mount ③ over bolt ④ as shown (FIG. 10).

3.8 With your hand on position ⑤, push actuator mount down and guide actuator mount tab ⑥ into the frame bracket ②, until it rests completely inside the frame bracket ②.

3.8.1 At this point, the two **red** dots (**green** if right side mount) will align, one over top of the other, when actuator mount is in proper position, as shown (FIG. 11).

3.8.2 FIGs. 12 and 13 show completed actuator installation.

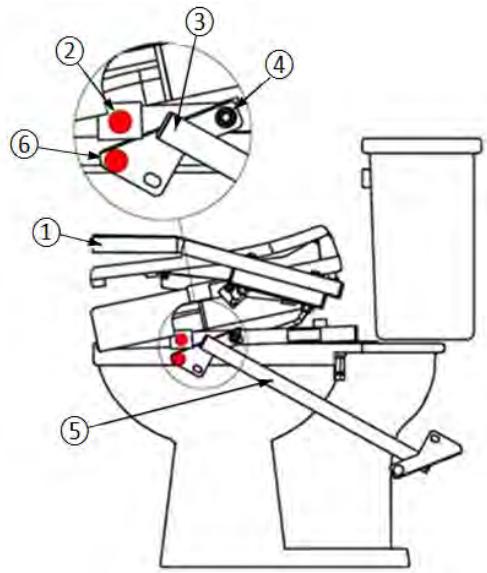

FIG. 10

FIG. 11

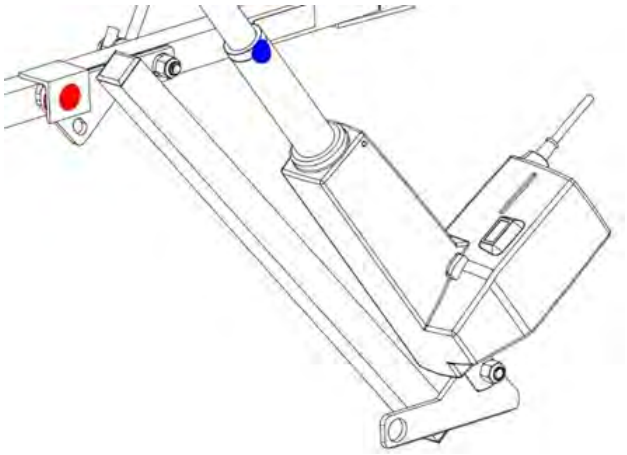

FIG. 12
(LEFT SIDE MOUNT)

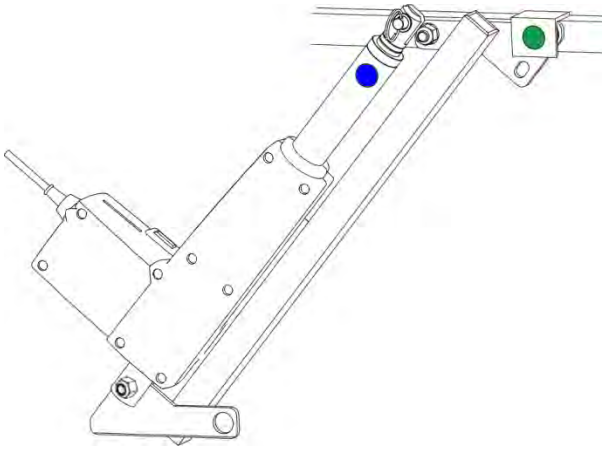

FIG. 13
(RIGHT SIDE MOUNT)

4. ACTUATOR DETAIL AND ASSEMBLY

4.1 Using the **blue** dots on actuator bracket ③ and actuator ④ as guides (FIG. 14), hold actuator ① and lower the seat to align the actuator slot with the actuator bracket ②.

4.2 Ensure the actuator bracket rests inside of the actuator slot.

4.3 Once aligned, fully insert the pin into actuator and through the bracket (FIG. 15).

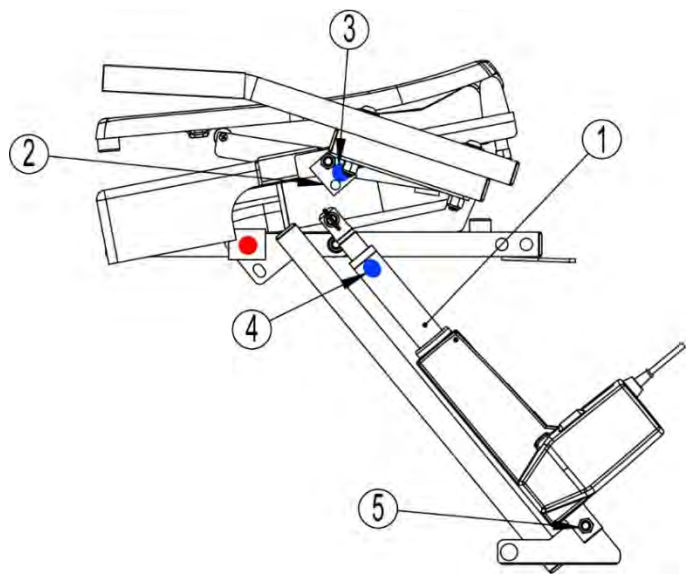

FIG. 14

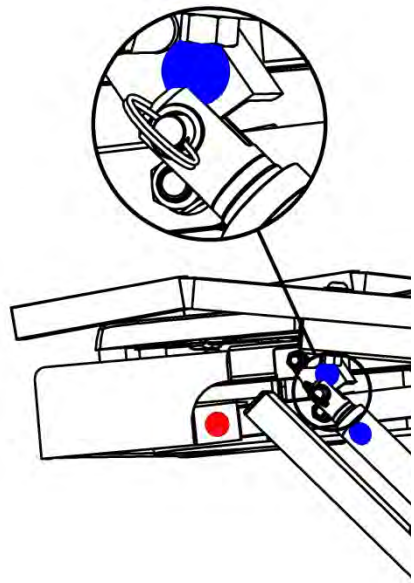

FIG. 15

5. INSTALLING MOUNTING BRACKET AND CONTROL BOX

5.1 The battery and control box ship from the factory attached to the mounting bracket and both will need to be removed prior to installing the mounting bracket.

5.1.1 For component understanding, FIG. 16 illustrates the exploded view of the battery, control box, and mounting bracket assembly.

5.2 Remove battery by squeezing the spring handle (FIG. 17) inward and pulling upward on the battery until it slides up and disengages from the mounting bracket.

5.3 Remove control box from mounting bracket (FIG. 18) using 3mm hex key. Set screw aside for later use.

5.4 Choose a mounting location within 3' of the toilet (the control box cord length requires installing the mounting bracket within that range).

5.5 Install mounting bracket (hardware not included) to a wall or other suitable structure as chosen by installer or contractor, using the on-center mounting pattern (FIG. 19).

5.6 Once the mounting bracket is installed, re-install control box by sliding control box onto mounting bracket, ensuring that the slots on the back of the control box slide into the tabs on the mounting bracket.

5.6.1 Secure control box to mounting bracket using 3mm hex key to re-insert the screw (FIG. 18).

5.7 Re-install battery by sliding battery onto mounting bracket. Battery is in place when it rests on top of the control box and when you hear the spring handle 'click' into place (FIG. 20).

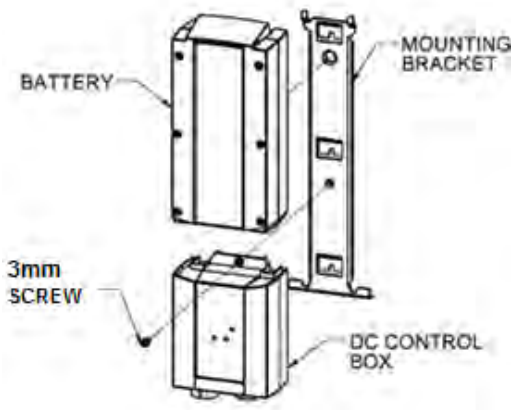

FIG. 16

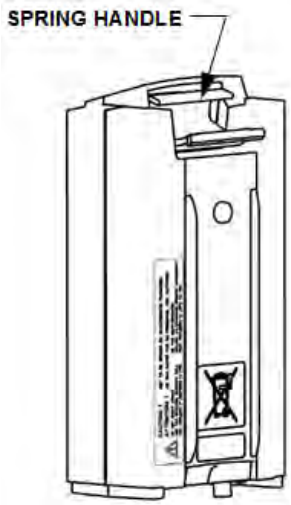

FIG. 17

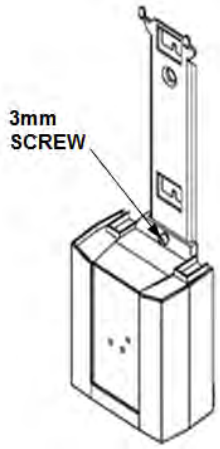

FIG. 18

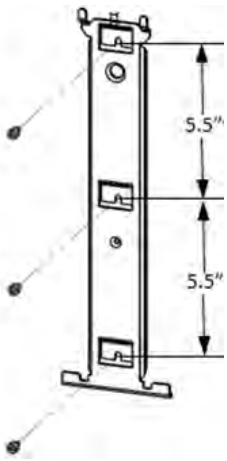

FIG. 19

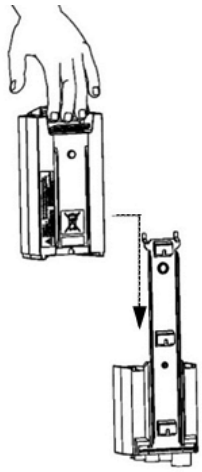

FIG. 20

6. BATTERY

6.1 The battery powered TILT operates on a single 24 VDC, 2.9 Ah battery with a separate battery charger (FIG. 21). The battery charger operates off typical household power - 120 VAC at .5 amps - and must be plugged into a properly grounded GFCI protected outlet.

- ⚠ If you are unsure if you have a properly grounded GFCI protected outlet, contact an electrical contractor for assistance.
- ⚠ Never remove a ground pin from any power cord and never use a power cord that has the ground pin removed.

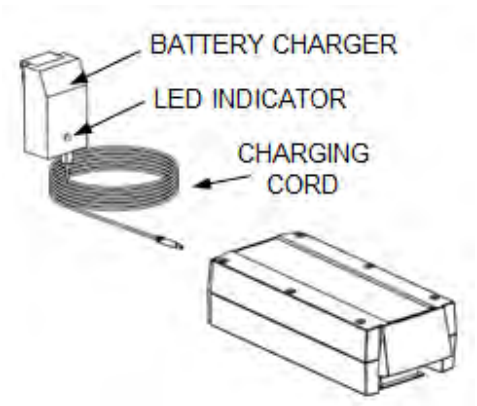

FIG. 21

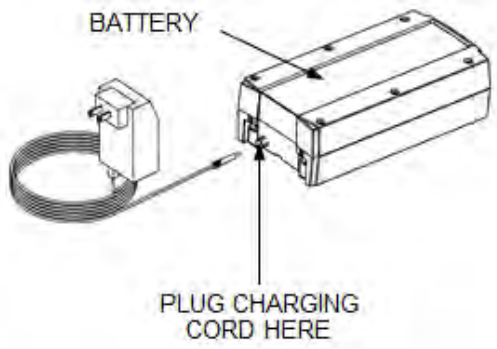

FIG. 22

7. BATTERY CHARGING

7.1 Prior to first battery use, charge battery for 24 hours to reach proper function and prolong useful lifetime.

- 7.1.1 After initial 24-hour charge, undamaged, functional batteries will fully charge in approximately 6 hours. Please note that charge times are heavily influenced by battery condition. Your charge times may vary.
- 7.1.2 The number of cycles the TILT will complete before the battery loses charge depends on battery condition, loads, and state of charge. A fully functional, undamaged, and fully charged battery will operate approximately 20 cycles (one “cycle” of the TILT is defined as moving the TILT up-and-down once or down-and-up once). Because batteries wear and age, battery performance will naturally decrease and charging time will increase over time.

7.2 Remove battery from the mounting bracket (see ‘SECTION 5’).

7.3 Plug charging cord into battery as shown (FIG. 22). Charge the battery by plugging the 120 VAC battery charger into a properly grounded GFCI protected outlet.

7.4 Battery has full charge when battery charger LED indicator turns **green**.

7.5 Once charged, unplug charging cord from battery, and then return battery to the mounting bracket.

7.6 Do not let batteries fully discharge before connecting to battery charger. To extend battery life, be sure to charge the battery whenever possible. A large number of cycles can be obtained from battery operation, but battery lifetime is reduced with frequent discharging.

7.7 To keep your TILT operational while the battery is charging, additional batteries are available.

8. CONNECT ACTUATOR TO CONTROL BOX

8.1 Connect the actuator cord ④ to control box ③ by inserting the jack into the location shown (FIG. 23).

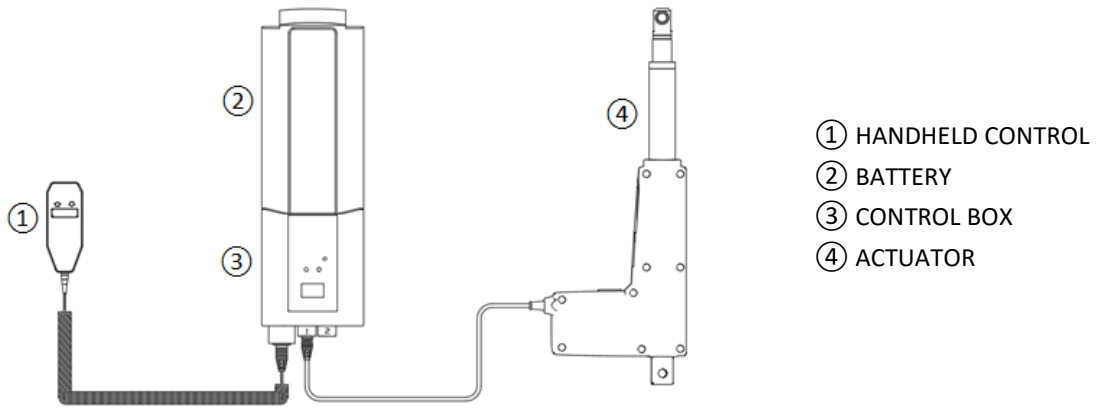

FIG. 23

9. HANDHELD CONTROL

9.1 The handheld control ships from the factory already plugged into the control box; no further assembly is required.

9.1.1 Should you need to re-connect, insert the round, 8-pin plug on handheld control ① by aligning its guide with the groove on the control box ③, into the location shown (FIG. 23).

9.2 Spend some time to become familiar with the look and feel of the handheld control as well as the location of the control's directional arrows (FIG. 24).

9.3 Use the handheld control to test cycle (raise and lower) the TILT 3-4 times, without sitting on or adding any weight to the seat, to learn its functionality, ensure that the unit is free from obstructions, and is working properly.

9.3.1 To RAISE: Push and hold the "up" button to raise the TILT.

9.3.2 To LOWER: Push and hold the "down" button to lower the TILT.

9.4 For convenient storage and access, hang the handheld control onto the TILT handle (FIG. 25).

9.4.1 Ensure the handheld control is placed on the handle nearest the battery and actuator and route the cord in a manner that is convenient and non-hazardous to the user.

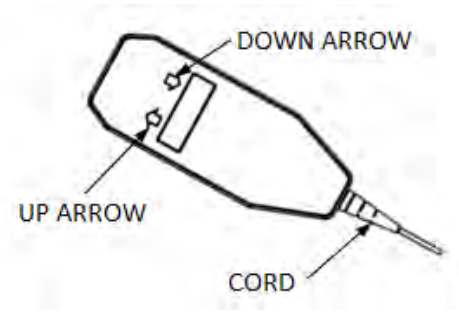

FIG. 24

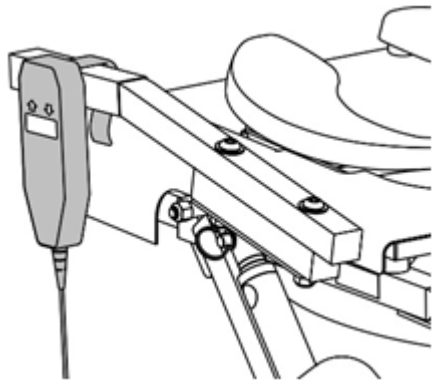

FIG. 25

10. POST-INSTALLATION AND BEFORE USE INSPECTION

10.1 Inspect the TILT to make sure all components are in place.

10.2 Use the handheld control to cycle the unit up and down (see 'SECTION 9' for more information), making sure it's free from obstructions and working properly. Ensure that all hardware is in place and that the TILT operates properly.

10.3 For questions or concerns, consult your Certified Dealer or Technician.

11. CLEANING / SANITIZATION / MAINTENANCE

11.1 For hygiene and safety, diligent cleaning, sanitization, and inspection of the TILT is essential and each situation may have unique requirements. For example, multiple users may have different health and sanitization needs than a single user. It is important that an effective cleaning and sanitization schedule be established that fits your situation. You may clean debris and soils from the TILT using a soft cloth with warm water and mild soap, noting that while soap and water may remove debris, additional methods are needed to sanitize the TILT. Ensure all potential contaminates are removed and the TILT is sanitized before and after each use.

11.2 Do not use toilet bowl cleaner or abrasives on the TILT or any of its components.

- ⚠ Prior to cleaning the TILT, ensure the battery is disconnected from the control box and the battery charger is unplugged from the wall.
- ⚠ Ensure all components are dry prior to re-assembly and use of the TILT.

11.3 To access the removable plastic shield for cleaning, use the handheld control to raise the TILT into its "up" position.

- 11.3.1 Lift toilet seat.
- 11.3.2 Remove the plastic shield (FIG. 26) by grabbing it from the front and lifting upward, then pulling forward until the shield slides out of the TILT.

11.4 To re-insert the plastic shield:

- 11.4.1 Ensure the TILT is raised to its "up" position.
- 11.4.2 Lift toilet seat.
- 11.4.3 Insert the plastic shield (FIG. 26) by aligning cutouts over the support rollers.
- 11.4.4 Lower toilet seat.

11.5 TILT shown lowered with plastic shield in place (FIG. 27).

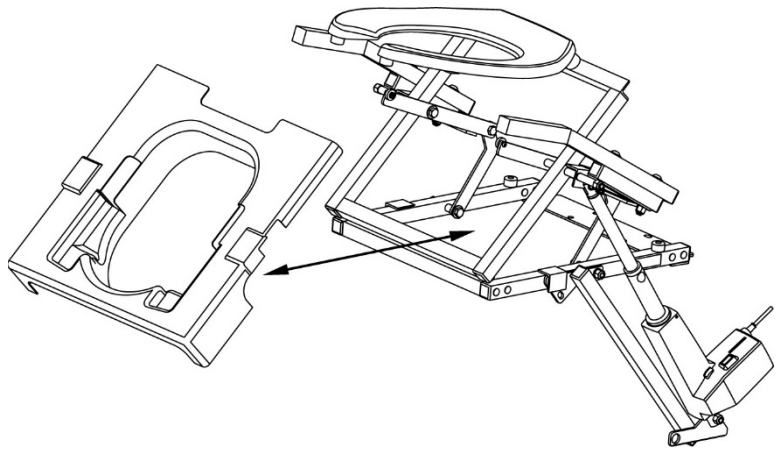

FIG. 26

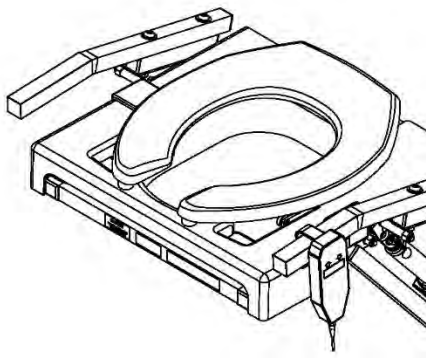

FIG. 27

12. TROUBLESHOOTING

SYMPTOM	POTENTIAL CAUSE	SOLUTION
TILT will not lift	• Battery discharged • Battery damaged, cannot hold charge • Battery charger not charging • Handheld control push button non-functional	• Charge battery • Replace battery and charge • Call for assistance checking battery and charger • Call for assistance checking handheld operation
TILT will not lower	• Battery discharged • Mechanical obstruction • Handheld control push button non-functional	• Charge battery • Check for, and clear, all obstructions • Call for assistance checking handheld operation
Battery charger green LED lamp does not illuminate	• Battery charger not charging • Battery damaged, cannot hold charge	• Unplug, wait 30 seconds, plug charger back in • Call for assistance checking battery and charger
Battery will not charge	• Battery charger not properly plugged in • Battery damaged, cannot hold charge • Battery charger not charging	• Ensure charger is plugged into a functional circuit • Call for assistance checking battery and charger
TILT shakes or is noisy	• Damaged or loose toilet hardware	• Inspect hardware, replace as necessary
Seat moves left or right	• Loose mounting hardware at seat	• Inspect hardware, replace as necessary