LUMEX®

PATRIOT®

Homecare Bed Series

MODEL US0208 / US0208PL SEMI-ELECTRIC BED

MODEL US0458 / US0458PL FULL-ELECTRIC / LOW BED

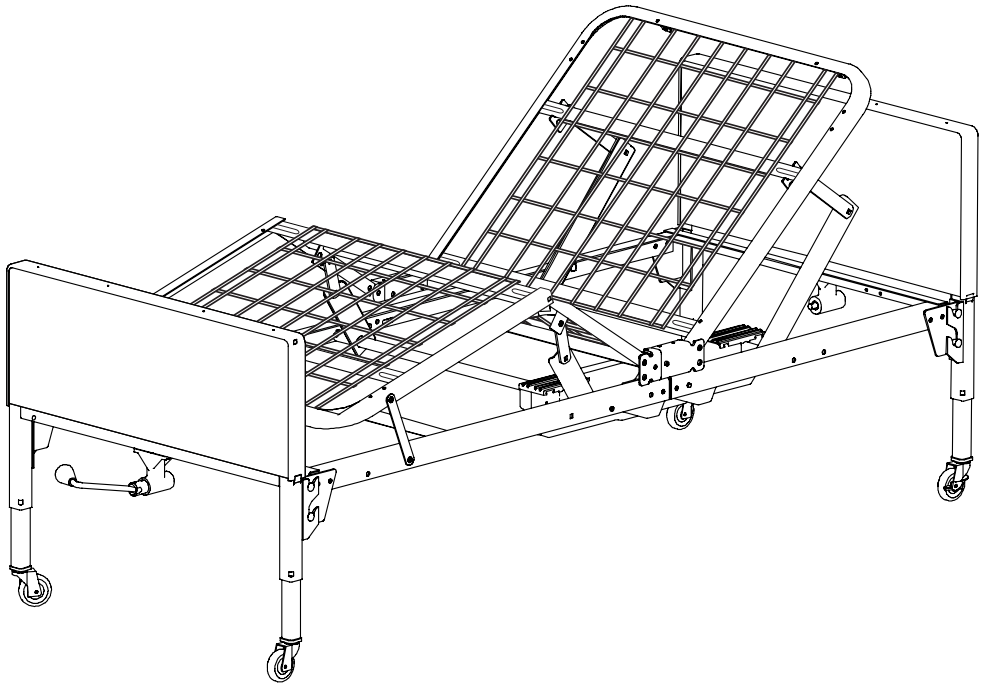

USER MANUAL

READ THIS MANUAL BEFORE OPERATING THE PATRIOT™ HOMECARE BED.
SAVE THIS MANUAL FOR FUTURE USE.

US0208-INS-LAB-RevE13

CONTENTS

1 SAFETY 3
WARNING / CAUTION / NOTICE SUMMARY 3
2 INTRODUCTION, PATRIOT HOMECARE BED USER MANUAL 5
THERMAL MOTOR PROTECTION 5
GRAVITY-DOWN FEATURE FOR HEAD AND KNEE ELEVATION 5
3 ASSEMBLY INSTRUCTIONS 6
HEAD AND FOOT ASSEMBLY 6
MOTOR ASSEMBLY 7
REMOVE MOTOR SLIDE CAPS 7
INSTALL MOTORS 7
INSTALL MOTOR SLIDE CAPS 8
MOTOR ASSEMBLY TROUBLESHOOTING 8
FULL-ELECTRIC BED ONLY (US0458 / US0458PL): CASTER POSITION 8
STANDARD (CONVENTIONAL) BED HEIGHT 8
LOW BED HEIGHT 8
BED END ASSEMBLY 9
ALL BED MODELS: ASSEMBLE BED HEAD END 9
ALL MODELS: ASSEMBLE BED FOOT END 9
ALL MODELS: INSTALL BED END LOCKING HARDWARE 10
FULL-ELECTRIC BED ONLY (US0458 / US0458PL): ASSEMBLE HI/LO MOTOR SHAFT TO FOOT END GEAR BOX 12
HI/LO ROD ASSEMBLY / BED LENGTH 13
SEMI-ELECTRIC BED ONLY (US0208 / US0208PL): ASSEMBLE HI/LO ROD 13
FULL-ELECTRIC BED ONLY (US0458 / US0458PL): ASSEMBLE HI/LO ROD 13
ALL MODELS: ATTACH HI/LO ROD TO GEARBOX OR MOTOR SHAFT PINS 14
4 BED OPERATION 15
PENDANT HAND CONTROL OPERATION 15
SEMI-ELECTRIC BED ONLY (US0208 / US0208PL) 15
FULL-ELECTRIC BED ONLY (US0458 / US0458PL) 15
CRANK OPERATION: SEMI-ELECTRIC BED ONLY (US0208 / US0208PL) 16
TRENDELENBURG POSITION, ALL MODELS 16
REVERSE TRENDELENBURG POSITION, ALL MODELS 16
5 SPECIFICATIONS, ALL MODELS 17
6 ACCESSORIES: BED RAILS 18
PATRIOT LIBERTY BED RAIL DESIGN 19
GF6500B-1: ASSIST BAR 19
GF6580BH-1: QUARTER RAIL 19
GF6590BH-1: HALF NO-GAP HEAD RAIL 20
GF6570B-1: FULL LENGTH RAIL 20
LUMEX UNIVERSAL BED RAILS 21
GF6570A-1: FULL LENGTH SIDE RAIL 21
7 SERVICE PARTS, ALL MODELS 22
BED COMPONENTS 22
BED END COMPONENTS 23
BED SERVICE PARTS 24
8 MAINTENANCE AND SAFETY CHECKS 25
9 LIMITED WARRANTY 26
10 INDEX 27

GF Health Products, Inc. is not responsible for typographical errors.
Graham-Field, **Lumex**, and **Patriot Homecare Bed Series** are registered trademarks, and **Patriot** is a trademark, of GF Health Products, Inc.

1 SAFETY

The safety statements presented in this chapter refer to the basic safety information that the operator of the Patriot Homecare Bed shall pay attention to and abide by. There are additional safety statements in other chapters or sections, which may be the same as or similar to the following, or specific to the operations. Please note the ºº following special statements, used throughout this manual, and their significance:

⚠ **WARNING: Indicates a potential hazard situation or unsafe practice that, if not avoided, could result in death or serious personal injury.**

⚠ **CAUTION: Indicates a potential hazard situation or unsafe practice that, if not avoided, could result in moderate or minor personal injury.**

▲ **NOTICE: Indicates a potential hazard or unsafe practice that, if not avoided, could result in product or property damage.**

Info: Provides application recommendations or other useful information to ensure that you get the most from your product.

WARNING / CAUTION / NOTICE SUMMARY

WARNING: To Reduce the Risk of Burns, Fire, Electric Shock, or Personal Injury:

⚠ **WARNING: Keep hands and feet clear of all moving parts.**

⚠ **WARNING: Do not allow small children on or near bed during operation.**

⚠ **WARNING: Do not allow this device to be operated by small children.**

⚠ **WARNING: When operating the hi/lo, knee, or back function of the bed, ALWAYS ensure that the individual confined to the bed is positioned properly within the confines of the bed. DO NOT let any extremities protrude over the side or between the bed rails when performing any functions.**

⚠ **WARNING: Under normal operating conditions, this product has a maximum weight capacity of 450 lb, EVENLY DISTRIBUTED, including mattress, accessories, rails, etc.**

This product has a maximum *patient* weight capacity of 350 lb, EVENLY DISTRIBUTED.

Ensure that body weight is evenly distributed over the surface of the bed. Do not lie, sit or lean in such a way that your entire body weight is placed only on the raised head or foot sections of the bed. This includes when assisting the user in repositioning or transferring in or out of bed.

⚠ **WARNING: In order not to invalidate the warranty or create a hazardous condition resulting in serious personal injury, GF Health Products, Inc. recommends the use of only Lumex replacement parts.**

⚠ **WARNING: Before operating, ensure that the bed frame rivets are properly seated in the bed end hooks; otherwise, personal injury or damage could result.**

⚠ **WARNING: Keep all moving parts free of obstructions (i.e. blankets/sheets, heating blankets/pads, tubing, wiring, and other types of products).**

⚠ **WARNING: Ensure that Bed End Locking Hardware is installed in order to prevent personal injury when moving the bed or using a bed-mount trapeze.**

⚠ **WARNING: WARNING/CAUTION labels applied to the bed outline hazards or unsafe practices that could result in personal injury and/or property damage; do not remove them.**

⚠ **WARNING: Ensure that the power cord DOES NOT get tangled around the bed, bed rails or legs during normal operation of the bed.**

⚠ **WARNING: Do not leave the bed unattended when plugged in.**

⚠ **WARNING: Notice for California Customers- California Proposition 65 WARNING: This product contains a chemical known to the State of California to cause cancer and reproductive or developmental harm.**

⚠ **WARNING: GF Health Products, Inc. assumes no responsibility for any damage or injury caused by improper assembly or use of this product.**

⚠ **WARNING: GF Health Products, Inc. specifically disclaims responsibility for any bodily injury or property damage which may occur during any use which does not comply with federal, state or local laws or ordinances.**

NOTICE: To Reduce the Risk of Product or Property Damage:

▲ **NOTICE: The pendant hand control cord must be routed and secured properly to ensure that the cord does NOT become entangled and eventually severed during use.**

▲ **NOTICE: When using nasal or masked type administering equipment, oxygen or air tubing MUST be routed and secured properly to ensure that tubing does NOT become entangled and eventually severed during normal operation of bed.**

2 INTRODUCTION, PATRIOT HOMECARE BED USER MANUAL

This manual contains assembly and maintenance instructions for your Model US0208 / US0208PL Semi-Electric and US0458 / US0458PL Full-Electric / Low Patriot bed. Read the entire manual carefully before using your bed, and refer to it during use if you have questions.

THERMAL MOTOR PROTECTION

This product is powered by a quiet, efficient DC motor system. When the bed is plugged into a power outlet, the electrical transformer is always energized in a stand-by condition. The Okimat actuator casing may feel warm to the touch even when the bed is not being used; this is a normal condition.

Thermal protection activation (protection against overheating caused by excessive or extended periods of operation), which causes the bed to shut down operation when overheated, is a safety feature of this product.

Causes of thermal protection activation include multiple or repeated adjustment of long duration, or the use of multiple functions at one time. To ensure trouble-free operation, always allow a slight pause between multiple adjustments, and avoid operating more than one function at a time. If thermal protection activation occurs, the bed pendant hand control will not function. The thermal protection will reset after a period of time dependent on the severity of the overheating. To shorten the reset time, temporarily unplug the power cord from the power outlet.

GRAVITY-DOWN FEATURE FOR HEAD AND KNEE ELEVATION

Patriot beds are equipped with a gravity-down safety feature. The motors push the head and knee grid decks up, but do not pull the knee and head down. As the motor plunger retracts, the head and knee lower freely, minimizing bed damage and/or personal injury from items caught under the grid deck.

Info: When using telescoping deck-mount bed rails, the head and knee may not lower without weight on the bed.

3 ASSEMBLY INSTRUCTIONS

HEAD AND FOOT ASSEMBLY

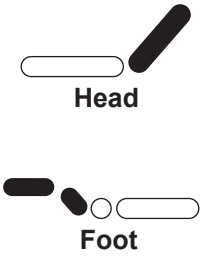

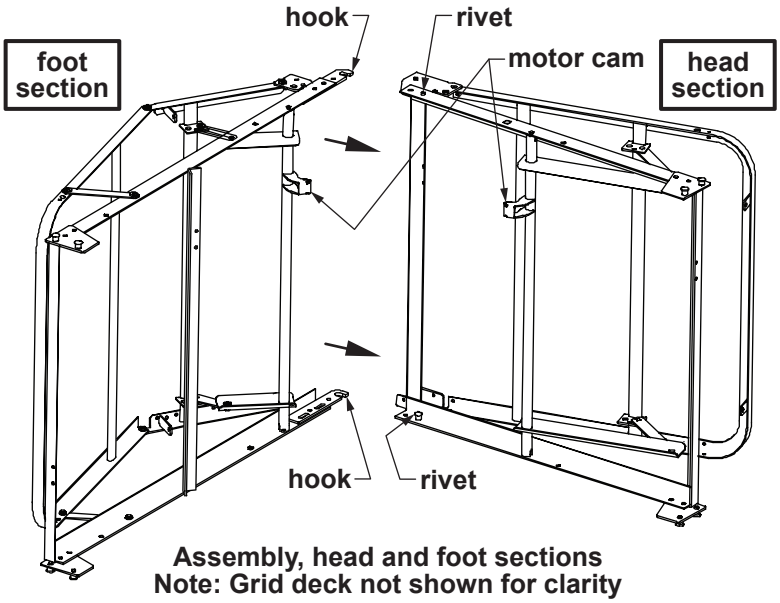

Assembly, head and foot sections
Note: Grid deck not shown for clarity

1. Place the head and foot sections on their sides at approximately right angles to each other with motor cams up, as shown above.
2. Slide the head and foot sections together until the foot section's hook catches the head section's rivet **on both sides**. Ensure both rivets are completely seated before continuing.

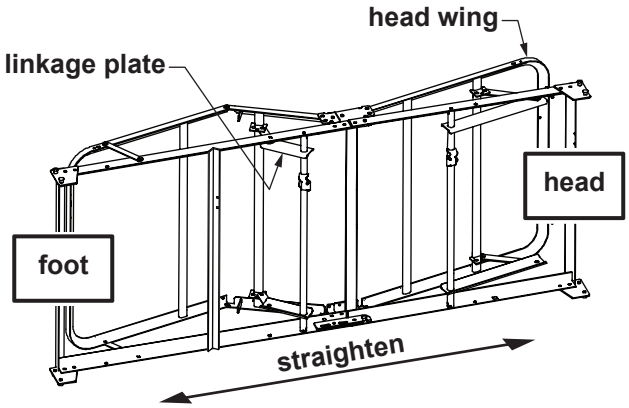

Straighten sections
Note: Grid deck not shown for clarity

3. With the rivets fully seated in the hooks as described in step 2, rotate and straighten the bed as shown above. Position head wing as shown above.

▲ **NOTICE: While balancing the frame, do not elevate the knee too far or the linkage may over-extend and lock. If the linkage locks, manually push the large linkage plate toward the foot of the bed.**

MOTOR ASSEMBLY

⚠ **WARNING: Assemble motor on bed as follows. While it is possible to install the motor backwards, avoid it! Incorrect installation could cause the bed to move in unexpected ways. Note that the motor ends are labeled and embossed with head and foot symbols (shown at right). Ensure that bed head and motor head, and bed foot and motor foot, are matched.**

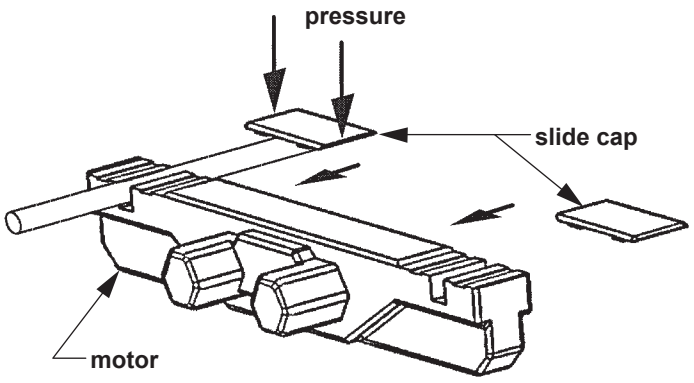

Install motor slide caps

Remove motor slide caps

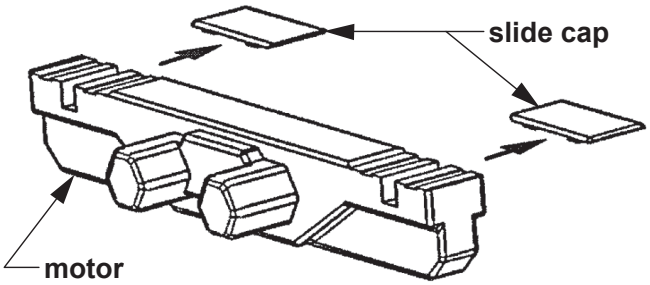

Remove motor slide caps

1. Remove the slide caps from both ends of the motor as shown above. Plungers should be recessed in motor cavities; if not, plug the power cord into any grounded outlet and operate “down” function on the pendant hand control, ***then unplug the power cord***.

Info: Motor comes from factory with pendant hand control plugged into motor.

2. Install 9V backup battery (not provided) and slide into storage area.

Install Motors

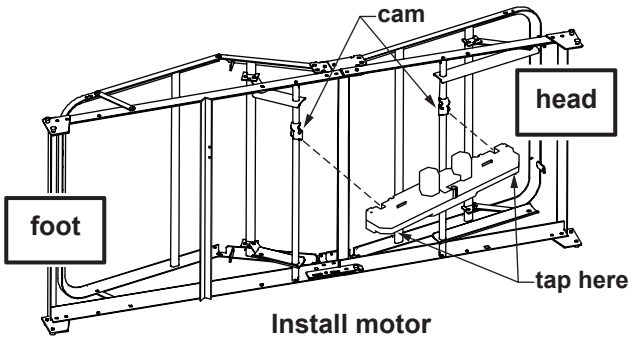

Install motor

3. Hold the bed securely, positioned with motor cams up, as shown above.
4. Position the motor over both cams.
5. Tap either end of the motor housing (shown below) with enough force to snap the motor assembly into position on the cam.
6. Repeat step 5 for other end of motor.

Install motor slide caps

7. Position the caps as shown at right so that the grooves in the slide cap are aligned with the grooves in the motor.
8. Apply straight downward pressure to each end of the cap while sliding into the closed position.
9. Repeat step 8 for the other cap.
10. Ensure that all four corners of each slide cap are engaged.

⚠ **WARNING: Ensure that the motor is assembled on bed as instructed above before use.**

Motor assembly troubleshooting

Problems associated with improper motor installation are listed below, with appropriate fix.

Problem	Probable cause	Fix
Head operates with knee control button and knee operates with head control button	Motor is installed backwards	Remove motor and reverse it (see previous page)
Knee lifting linkages bind against grid deck, preventing knee deck from elevating.	Motor is installed backwards, enabling knee to elevate too high and bind linkage	Remove motor and reverse it (see previous page)

FULL-ELECTRIC BED ONLY (US0458 / US0458PL): CASTER POSITION

Any full-electric Patriot bed can be used as either a standard-height or low-height bed by moving the casters.

fig 1: casters mounted at standard height

fig 2: casters mounted at low height, bed in lowest position

fig 3: casters mounted at low height, bed in elevated position

Standard (conventional) bed height

To achieve standard bed height, insert casters into outside legs, as shown in fig. 1 above.

Low bed height

To achieve low bed height, insert casters into inner short legs, as shown in figs. 2 and 3 above.

When in the lowest position, the casters are engaged for bed movement, as shown in fig. 2 above.

When elevated, the bed is off the casters and cannot be moved, as shown in fig. 3 above.

Due to the clearances involved, only minor travel and movement are recommended in the low position. The casters can be moved to the outer legs to provide clearance if the bed must be moved or rolled.

BED END ASSEMBLY

All bed models: Assemble bed head end

1. Insert one locking and one non-locking caster into bed end. **Locking casters must be installed diagonally from each other.** See previous page for full-electric caster position options.
2. Standing directly in front of the bed end, position it as close to the bed as possible.
3. With one hand, reach over end and lift up the bed.

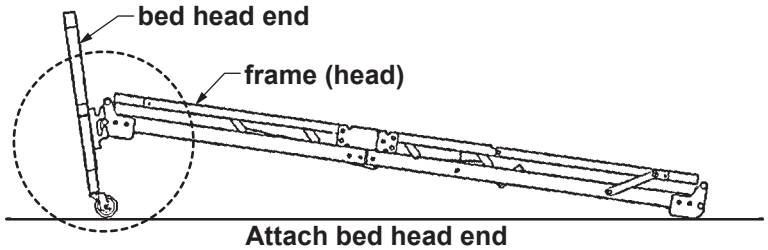

Attach bed head end

4. Tilt the bed end slightly back toward you as shown above.

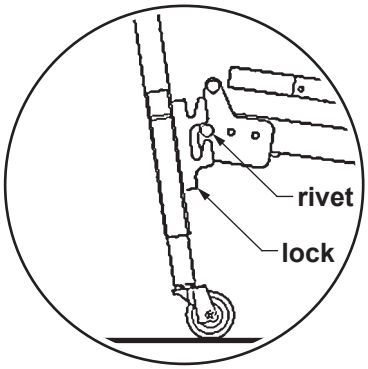

Engage lower rivet

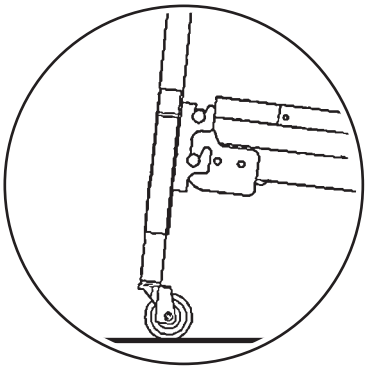

Lower bed onto lock

5. Engage lower rivet slightly with corner lock and tilt end toward bed as shown at above left.
6. Lower bed onto corner lock as shown at above right.

All models: Assemble bed foot end

After bed head end has been attached, perform steps 1-6 in **All models: Assemble bed head end** above to install the foot end.

All models: Install bed end locking hardware

1. After bed head end has been attached, install **Bed End Locking Hardware** to act as a latch for each corner.

   Bed End Locking Hardware, part number 690-1000-100, includes four lanyards, each assembled from a clevis pin, hairpin clip, fender washer, and nylon cord, as shown at right. Bed end locking hardware, while not necessary for normal bed operation, will prevent the bed ends from accidentally rolling off when moving or pushing the bed, or while installing or using bed-mount trapezes.

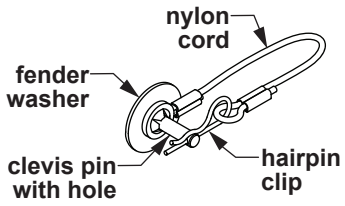

Lanyard

⚠ **WARNING: GF Health Products, Inc. recommends the use of Bed End Locking Hardware at all times.**

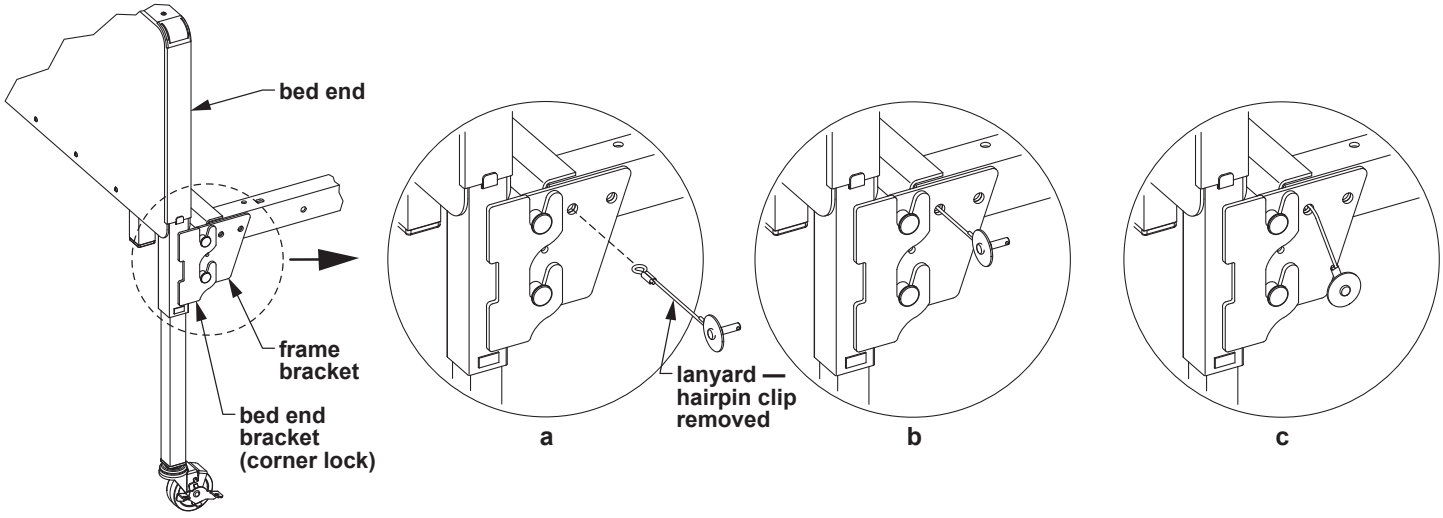

2. Refer to accompanying illustrations while installing Bed End Locking Hardware. Remove the hairpin clip from the end of the lanyard assembly, as shown in **a**, and set it aside.
3. Align the cord end with the frame bracket top hole closest to the bed end. Insert the cord end through the hole so that an equal amount of cord extends outside either side of the frame bracket hole, as shown in **b**.
4. The lanyard assembly will now hang loosely with the clevis pin and fender washer end on the outside, as shown in **c**.

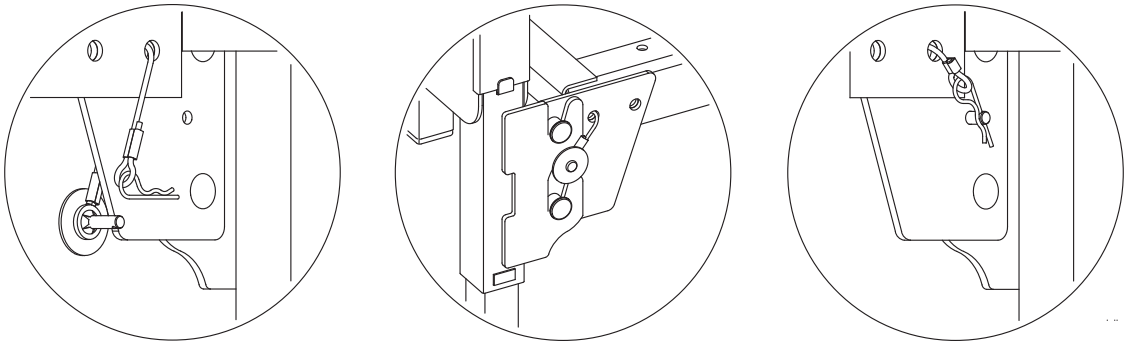

d e f

5. From the inside, reattach the hairpin clip to the cord's looped end as shown in **d**. This prevents the cord from slipping back through the frame bracket hole.
6. From the outside, insert lanyard clevis pin with washer into the small hole directly below the bed end bracket top hook so that the washer rests against the bracket, as shown in **e**.
7. From the inside, insert the hairpin clip, now attached to the cord, into the clevis pin hole to secure, as shown in **f**.
8. Follow previous steps 1-7 for other bed end corners, ensuring that all four corners are securely fastened and locked in place.

Full-electric bed only (US0458 / US0458PL): Assemble hi/lo motor shaft to foot end gear box

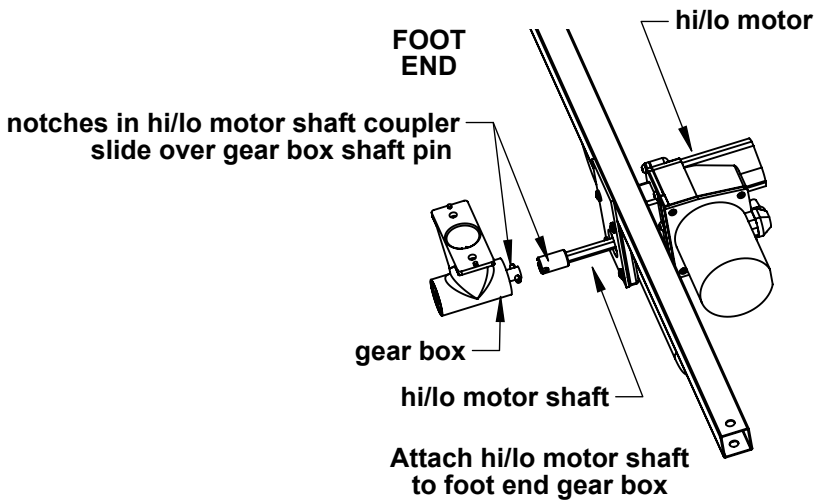

You must first attach the coupler end of the motor shaft to the foot-end gear box (see above).

1. Note the position of the hi/lo motor plug on the Okimat actuator next to the pendant hand control plug — plug the hi/lo motor into the actuator, ***routing the hi/lo motor cord under the fixed base frame cross-angle as shown below to ensure clearance with the hi/lo drive shaft.***
2. Plug the power cord into any grounded outlet.
3. Pull the motor shaft toward the foot end. Using the hi/lo function on your pendant hand control, ***slowly*** turn the hi/lo motor shaft until the coupler matches up with the gear box shaft pin as shown above.
4. Slide the coupler until it rests completely on the pin. You may need to manipulate the foot end slightly from side to side and/or lift the hi/lo motor itself for proper alignment.
5. Unplug the power cord.

⚠ **WARNING: Ensure power cord is unplugged before performing further bed assembly.**

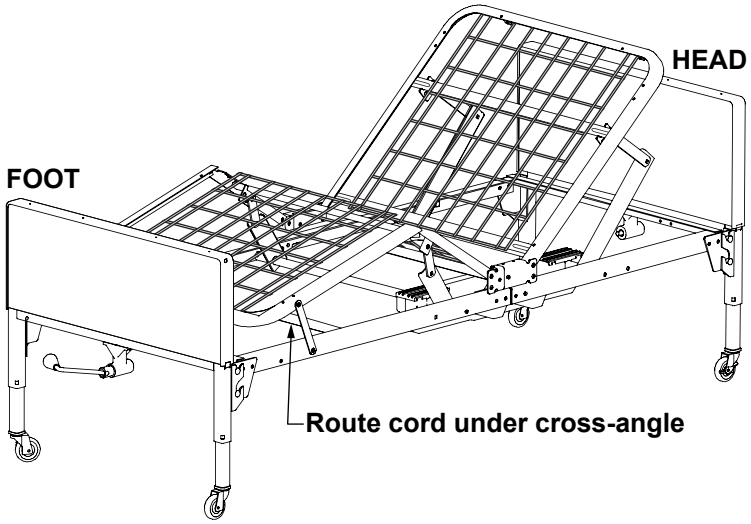

HI/LO ROD ASSEMBLY / BED LENGTH

The hi/lo rod assembly consists of an inner and outer tube with a spring button lock to keep them together.

1. Assemble outer and inner tubes:

Semi-electric bed only (US0208 / US0208PL): Assemble hi/lo rod

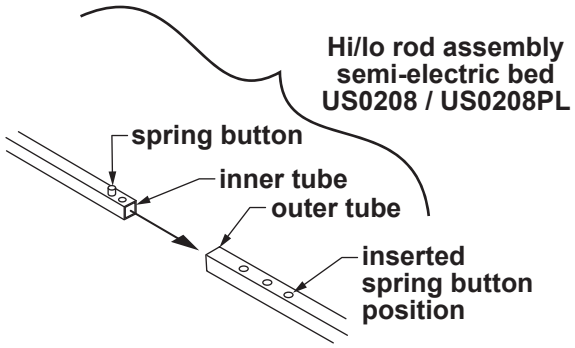

Depress spring button and insert inner tube into outer tube until third hole is reached as shown above. Release spring button to lock it into hole.

Full-electric bed only (US0458 / US0458PL): Assemble hi/lo rod

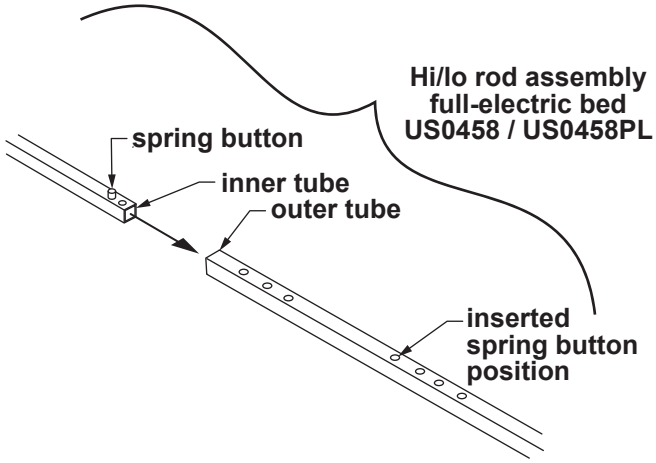

Depress spring button and insert inner tube into outer tube until first hole of second hole set is reached as shown above. Release spring button to lock it into hole.

All models: Attach hi/lo rod to gearbox or motor shaft pins

Both ends of the hi/lo rod assembly have a slot to mount on the foot end motor shaft pins and bed end gearbox shaft pins. Follow steps 2-3 to mount the hi/lo rod assembly on the gearboxes.

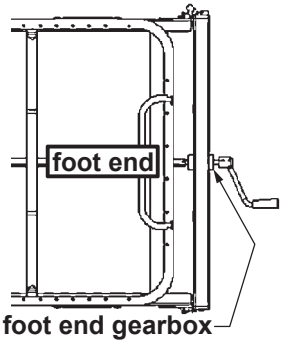

Fig 1: Semi-Electric Bed: Attach hi/lo rod assembly to foot end gearbox

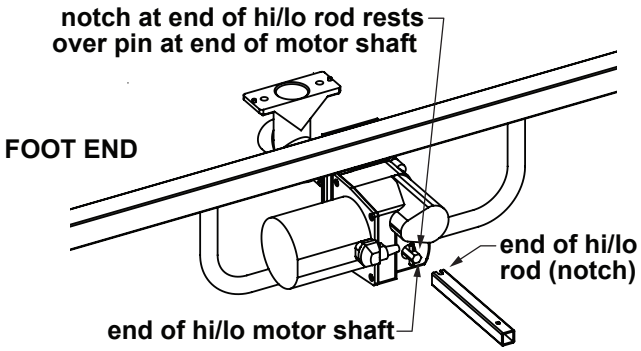

Fig 2: Full-Electric Bed: Attach hi/lo rod assembly to foot end hi/lo motor shaft

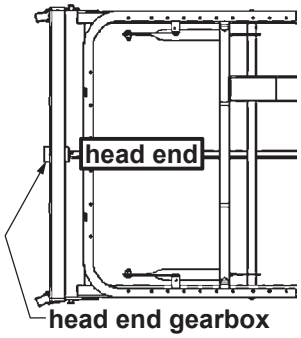

Fig 3: All Bed Models: Attach hi/lo rod assembly to head end gearbox

2. Connect the hi/lo rod assembly to the bed.

   Semi-electric bed: Attach either end of hi/lo rod assembly to the foot end gearbox as shown in Fig 1 above.

   Full-electric bed: Attach either end of hi/lo rod assembly to the foot end hi/lo motor shaft as shown in Fig 2 above.

3. Attach other end of hi/lo rod assembly to head end gearbox as shown in Fig 3 above.

4 BED OPERATION

⚠ WARNING: Ensure that bed is secure and assembled as instructed on previous pages before operating.

Plug the power cord into any grounded outlet.

⚠ WARNING: Do not leave the bed unattended when plugged in.

Info: In the event of a power failure, use a standard 9V battery to lower the bed's head and foot sections (the 9V battery connection is attached to the motor). When used with the battery, the motor will only lower, not lift, the head and/or foot sections.

PENDANT HAND CONTROL OPERATION

Semi-electric bed only (US0208 / US0208PL)

The semi-electric pendant hand control is shown at right. Use the pendant hand control to raise and lower bed head and foot. Each button has a different function, as noted in the picture.

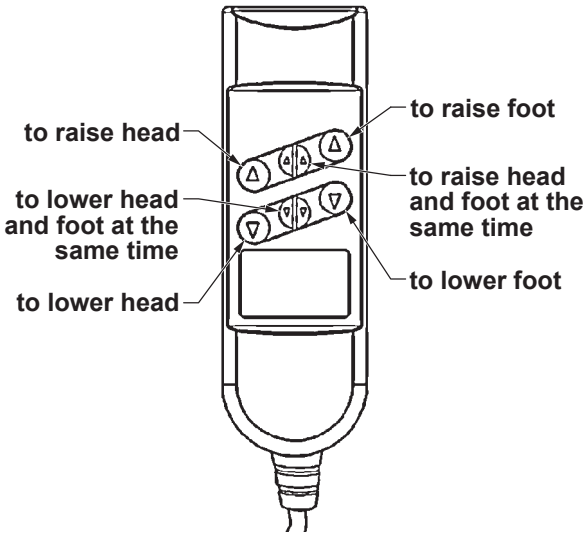

Semi-electric pendant hand control

Full-electric bed only (US0458 / US0458PL)

The full-electric pendant hand control is shown at right. Use the pendant hand control to raise and lower bed, head and foot. Each button has a different function, as noted in the picture.

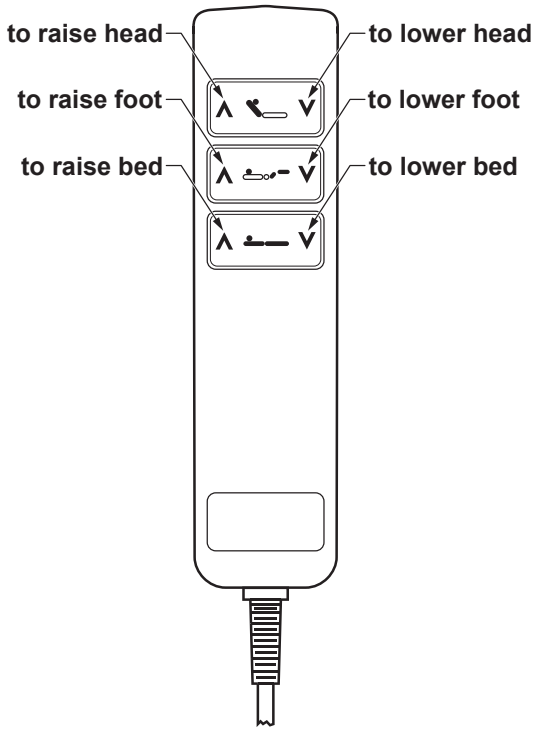

Full-electric pendant hand control

CRANK OPERATION: SEMI-ELECTRIC BED ONLY (US0208 / US0208PL)

Use the crank at the center foot of the semi-electric bed (shown at right) to change bed height (raise or lower entire deck).

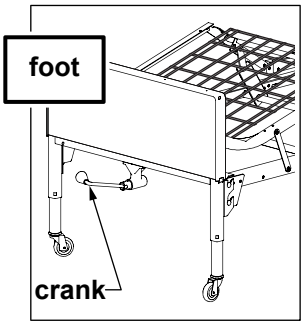

Crank operation

TRENDELENBURG POSITION, ALL MODELS (HEAD END AT LOWER ELEVATION THAN FOOT END)

1. Lower bed to its lowest height. Disengage the hi/lo rod by compressing the spring button and removing the hi/lo rod from the motor or bed end.
2. Raise the foot bed end using the pendant hand control or crank (semi-electric bed only). The head end will remain in the low position.

REVERSE TRENDELENBURG POSITION, ALL MODELS (HEAD END AT HIGHER ELEVATION THAN FOOT END)

1. Raise bed to its highest height. Disengage the hi/lo rod by compressing the spring button and removing the hi/lo rod from the motor or bed end.
2. Lower the foot bed end using the pendant hand control or crank (semi-electric bed only). The head end will remain in the high position.

5 SPECIFICATIONS, ALL MODELS

<table>
<tr><td rowspan="4">Deck height</td><td>High position</td><td colspan="3"> 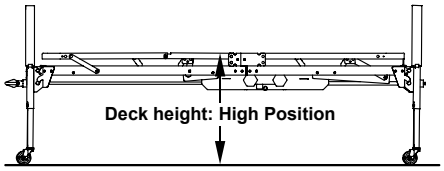
</td></tr>
<tr><td>US0208 / US0208PL:
24.0 inches</td><td>US0458 / US0458PL with casters in low position:
20.0 inches</td><td>US0458 / US0458PL with casters in standard position:
23.5 inches</td></tr>
<tr><td rowspan="2">Low position</td><td colspan="3"> 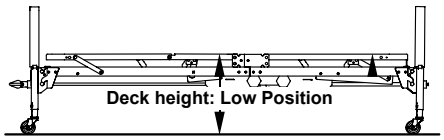
</td></tr>
<tr><td>US0208 / US0208PL:
15.0 inches</td><td>US0458 / US0458PL with casters in low position:
9.5 inches</td><td>US0458 / US0458PL with casters in standard position:
13 inches</td></tr>
<tr><td rowspan="2">Bed length
Info: To extend grid length (80 in.) to 84 in., install optional kit 690-0084-000 (all beds).</td><td colspan="4"> 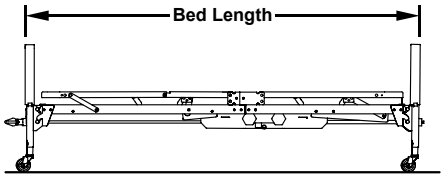
</td></tr>
<tr><td colspan="4">All models: 87.0 inches</td></tr>
<tr><td rowspan="2">Deck width</td><td colspan="4"> 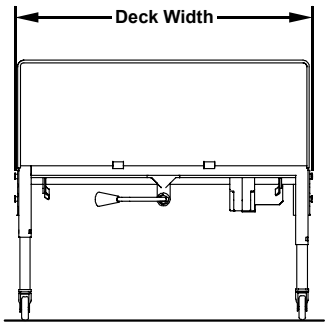
</td></tr>
<tr><td colspan="4">All models: 36.0 inches</td></tr>
<tr><td rowspan="2">Weight</td><td>Normal operating conditions</td><td colspan="3">450 lb, EVENLY DISTRIBUTED including mattress, accessories, rails, etc.</td></tr>
<tr><td>Maximum patient weight</td><td colspan="3">350 lb, EVENLY DISTRIBUTED</td></tr>
<tr><td rowspan="2">Construction</td><td>Frame</td><td colspan="3">10 ga (.135) high strength, low alloy steel (roll formed)</td></tr>
<tr><td>Sleeping surface</td><td colspan="3">11 ga (.120) cold rolled steel</td></tr>
<tr><td rowspan="6">Finish</td><td rowspan="5">5 stage bath</td><td colspan="3">1. S21F acid bath (cleans grease and oil from metal).</td></tr>
<tr><td colspan="3">2. Fresh water rinse.</td></tr>
<tr><td colspan="3">3. QuiliPhos 20 phosphate coat (inhibits rust and helps maintain electrical charge during powder application).</td></tr>
<tr><td colspan="3">4. Fresh water rinse.</td></tr>
<tr><td colspan="3">5. QuiliRinse 404 (seals metal for powder coating).</td></tr>
<tr><td colspan="4">All parts are then coated with a colored epoxy powder and baked 35 minutes at 375 degrees F. The powder coating finish is approximately 2.5 mils thick. The coating is smooth, uniform finish without runs, wrinkles, or grit.</td></tr>
</table>

6 ACCESSORIES: BED RAILS

Patriot Homecare Bed decks are equipped with patent-pending slots specifically for bed rail installation, providing a fixed place to mount GF bed rails. Two styles of Lumex bed rails are described in Section 6:

1) The Lumex Patriot Liberty bed rail system, designed specifically for Patriot Beds, and
2) The Lumex Universal bed rail system

⚠ **WARNING: Please read the following bed rail safety information before attaching and using your rails.**

Bed Rail Safety

⚠ **WARNING: If bed rails are not properly installed and adjusted, personal injury and / or damage to the bed rail could result.**

Please read and understand the following bed rail decal before use:

For information on Bed Rail safety, please see the FDA's brochure concerning Bed Safety and Bed Rails on the FDA website, at:
www.fda.gov/MedicalDevices/ProductsandMedicalProcedures/GeneralHospitalDevicesandSupplies/HospitalBeds/

⚠ **WARNING: Patient entrapment with bed side rails may result in serious injury or death. Use only with coherent patients capable of avoiding entrapment. Patients at risk of entrapment include those who have problems with memory, sleeping, incontinence, pain, uncontrolled body movement or who get out of bed and walk unsafely without assistance. For at-risk patients, use only with proper bed side rail protective barriers. There is also an increased risk of entrapment when bed rails are used in conjunction with a low air loss product.**

⚠ **WARNING: Bed side rails are not restraining devices. If restraint is required, use only proper protective restraints. Follow the manufacturer's instructions and applicable regulations. Monitor patient frequently.**

⚠ **WARNING: DO NOT push or pull the bed by the bed rails.**

⚠ **WARNING: GF Health Products, Inc. assumes no responsibility for any damage or injury caused by improper installation of bed rails or unauthorized bed rail use. Only Lumex bed rails are recommended for use with Patriot beds. Please consult the instructions that accompany your Lumex bed rails for complete rail assembly and installation instructions.**

PATRIOT LIBERTY BED RAIL DESIGN

Lumex Patriot Liberty Bed Rails, designed specifically for use with Lumex Patriot Beds, were developed using the ***FDA Hospital Bed System Dimensional Guidance to Reduce Entrapment*** and tested to the ***Hospital Bed Safety Workgroup and FDA Dimensional Test Methods for Bed System Zones 1-4*** and ***International Standard IEC60601-2-38 Requirements for the Safety of Electrically Operated Hospital Beds***. For installation of these FDA-compliant bed rails, follow the installation instructions that accompany them. Patriot Liberty Bed Rail descriptions follow.

GF6500B-1: Assist Bar

The Assist Bar, shown at right, is a secure handhold and support for active patients who need assistance getting in and out of bed on their own. This bar is bolted directly to either side of the bed frame to support the split frame when a patient enters or exits the bed. It can also assist patients capable of grasping the bar and maneuvering themselves with rotating and turning in bed.

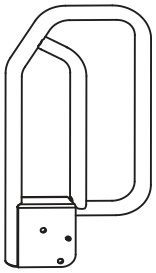

GF6500B-1
Assist Bar

GF6580BH-1: Quarter Rail

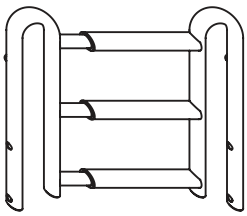

GF6580BH-1
Quarter Rail

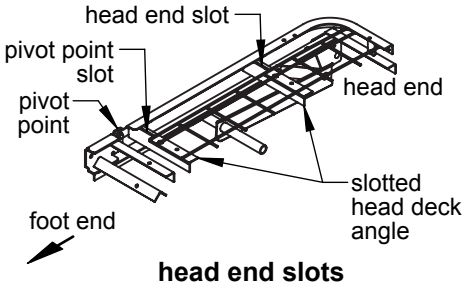

head end slots

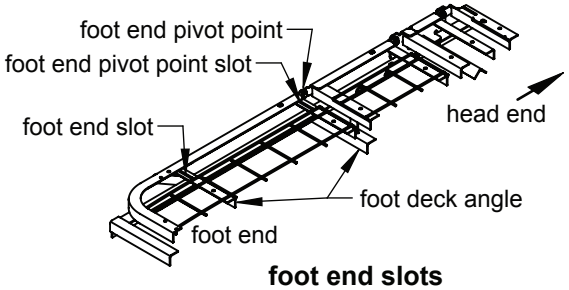

foot end slots

The Quarter Rail, shown above, is approximately 18 inches in length when mounted on the Patriot bed. It can be used as a head assist, head rail, or foot rail.

Mounting slot locations utilized when the Quarter Rail is used as a head rail are shown in “head end slots” above (opposite slots are directly across bed).

Mounting slot locations utilized when the Quarter Rail is used as a foot rail are shown in “foot end slots” above (opposite slots are directly across bed).

GF6590BH-1: Half No-Gap Head Rail

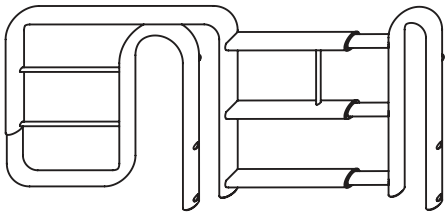

GF6590BH-1
Half No-Gap Head Rail

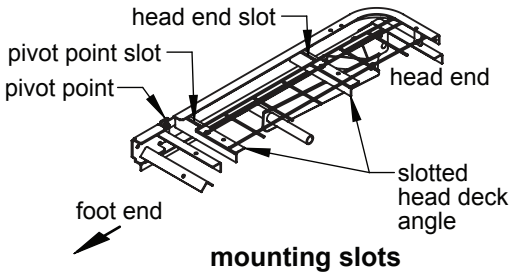

mounting slots

The Half No-Gap Head Rail, shown above, provides full head coverage of 31.5 inches and extends to eliminate the gap between the head board and the end of the rail. The GF6590BH-1 mounted on the bed's head and the GF6580BH-1 mounted on the bed's foot combine to create the Patriot split rail system.

Half No-Gap Head Rail mounting slot locations are shown in "mounting slots" above (opposite slots are directly across bed).

GF6570B-1: Full Length Rail

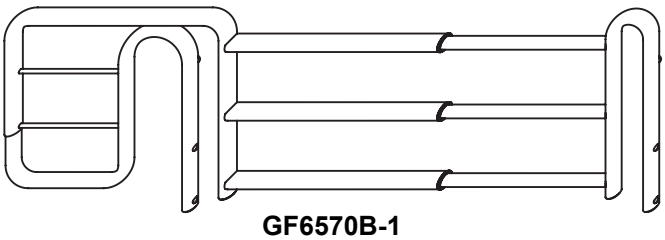

GF6570B-1
Full-Length Rail

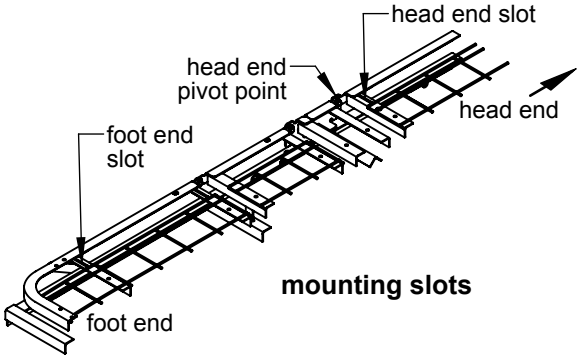

mounting slots

The Full Length rail, shown above, is a nominal, telescoping full length rail that provides maximum length rail perimeter coverage.

Full Length Rail mounting slot locations are shown in "mounting slots" above (opposite side slots are directly across bed).

LUMEX UNIVERSAL BED RAILS

If you install Lumex universal bed rails, follow the installation instructions that accompany them; the following instructions are provided to describe the differences between the installation of bed rail crossbraces on Patriot grid beds and spring beds.

⚠ **WARNING: Do not use the bed rails as handles for getting into or out of bed; this could result in personal injury and damage to the bed rails.**

GF6570A-1: Full Length Side Rail

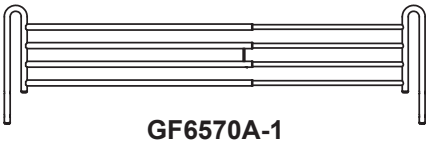

GF6570A-1
Full-Length Side Rail

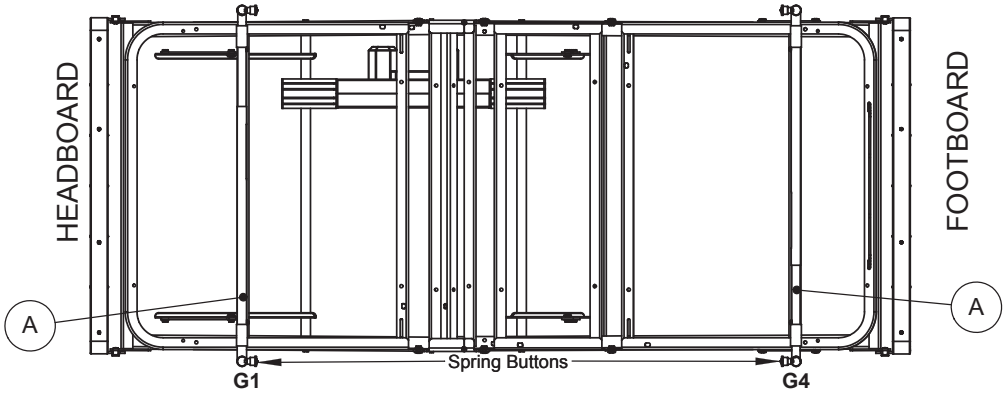

Position spring-loaded crossbraces #A into slots G1 and G4 on both sides of bed with spring buttons facing inward as shown above.

7 SERVICE PARTS, ALL MODELS

Service parts for all bed models are shown below and on the following two pages. See pictures and tables for appropriate service parts.

BED COMPONENTS

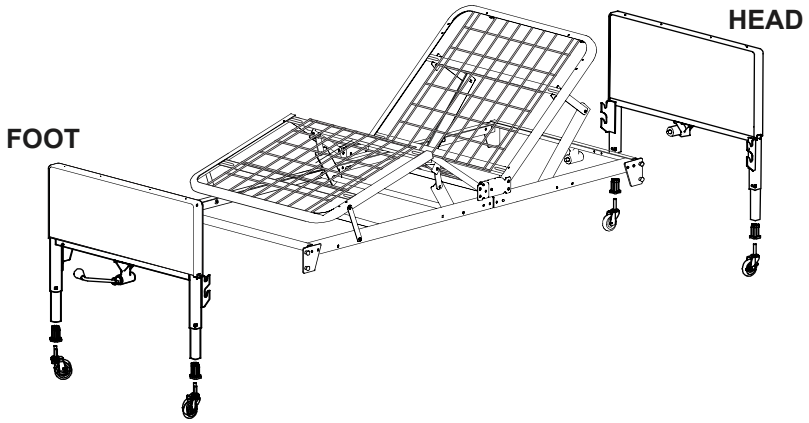

Part number	Description	Semi-electric		Full-electric	
		US0208	US0208PL	US0458	US0458PL
690-7100-901	Head section, includes hi/lo rod	X	X	X	X
690-7105-902	Foot section, semi-electric, includes motor	X	X		
690-7104-902	Foot section, full-electric, includes motors			X	X
690-7001-000	End set, semi-electric, walnut panels	X			
690-7601-000	End set, semi-electric, plastic panels		X		
690-7004-000	End set, full-electric, walnut panels			X	
690-7604-000	End set, full-electric, plastic panels				X

BED END COMPONENTS

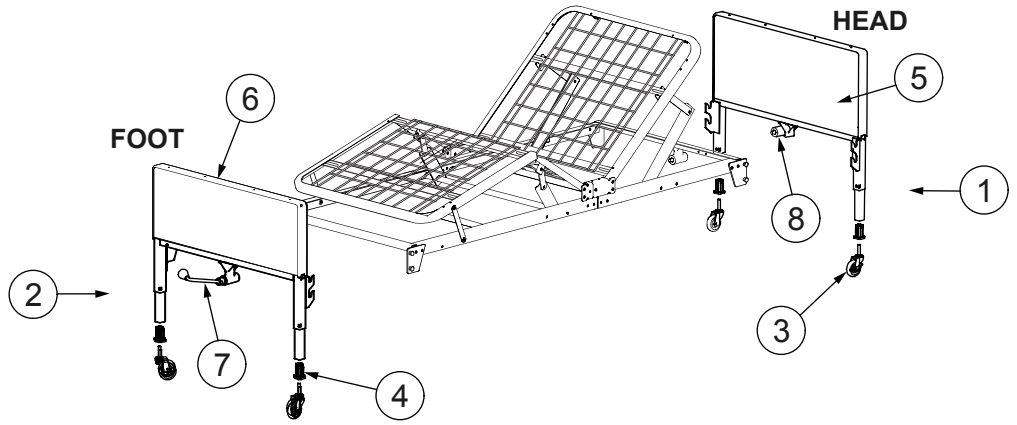

Item	Part number	Description	Semi-electric		Full-electric	
			US0208	US0208PL	US0458	US0458PL
1	690-7001-901	Head bed end, semi-electric, walnut panels	X			
	690-7601-901	Head bed end, semi-electric, plastic panels		X		
	690-7004-901	Head bed end, full-electric, walnut panels			X	
	690-7604-901	Head bed end, full-electric, plastic panels				X
2	690-7001-902	Foot bed end, semi-electric, walnut panels	X			
	690-7601-902	Foot bed end, semi-electric, plastic panels		X		
	690-7004-902	Foot bed end, full-electric, walnut panels			X	
	690-7604-902	Foot bed end, full-electric, plastic panels				X
3	999-0301-904	Caster, set of 4: 2 locking & 2 non-locking	X	X	X	X
	100-6330-014	Caster, non-locking, each	X	X	X	X
	100-6330-015	Caster, locking, each	X	X	X	X
4	100-4200-012	Caster socket, each	X	X	X	X
5	554-2001-015	End panel, head/foot, semi-electric, walnut panels	X			
	690-5001-025	End panel, head/foot, semi-electric, plastic panels		X		
	690-5004-015	End panel, head/foot, full-electric, walnut panels			X	
	690-5004-025	End panel, head/foot, full-electric, plastic panels				X
6	554-2001-059	Capping, bed end, head/foot, semi-electric	X	X		
	690-5004-059	Capping, bed end, head/foot, full-electric			X	X
7	600-2001-912	Foot elbow, full-electric			X	X
	600-2001-916	Foot elbow with crank, semi-electric	X	X		
	999-0353-000	Foot crank only, semi-electric	X	X		
8	600-2001-910	Elbow, head end, semi-electric & full-electric	X	X	X	X
9	690-1000-100	End locking hardware, set of 4 (not shown)	X	X	X	X

BED SERVICE PARTS

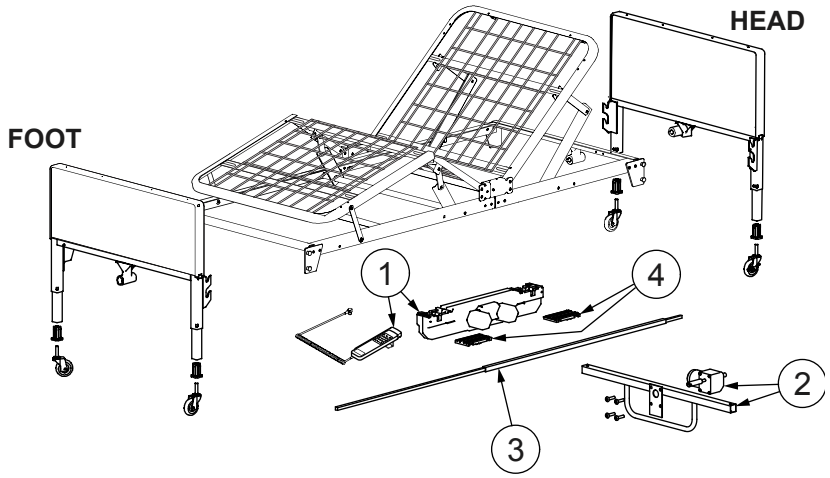

Item	Part number	Description	Semi-electric, H7920SE	Full-electric, H7920FE
			US0208 / US0208PL	US0458 / US0458PL
1	690-2001-913	Motor and pendant hand control, semi-electric	X	
	690-2001-411	Pendant hand control, semi-electric	X	
	690-3001-943	Motor and pendant hand control, full-electric		X
	690-2001-414	Pendant hand control, full-electric		X
2	690-7001-944	Motor and bracket, hi/lo		X
	690-3001-945	Motor, hi/lo, full-electric		X
3	554-2018-901	Hi/lo rod assembly	X	X
4	690-2001-412	Motor slide covers	X	X
5	690-1000-100	End locking hardware, set of 4 (not shown)	X	X

Info: US0208 and US0208PL are identified on the foot section component label as Patriot Semi-Electric Bed Model H7920SE.

Info: US0458 and US0458PL are identified on the foot section component label as Patriot Full-Electric Bed Model H7920FE.

8 MAINTENANCE AND SAFETY CHECKS

Perform the following as needed or between patient placements, whichever happens sooner:

Electronics and Motors	Check all controls to ensure that all functions work properly.	Foot control
		Head control
		Hi/Lo (if applicable)
	Check all cables for damaged or frayed wires.	Power cord
		Pendant hand control cord
	Check to ensure that all plugs are fully inserted or attached.	
	Check to ensure that all wires are routed and attached properly so not to interfere with any moving parts.	
	Inspect motor casings for excessive wear and cracks	
	Inspect motor slide caps for excessive wear and deformation	
Bed frames and sleeping surface	Visually check all welds	Head section
		Foot section
		Main Frame
	Check joints between sleeping surface sections for loose fasteners.	
	Inspect frames and sleeping surface for bending and excessive wear	
Cleaning	The metal parts of the bed are covered with a powder coating. Clean all coated parts with mild detergent and warm water. Periodically raise head and foot sections of the bed and remove dust from frame. Also, periodically remove mattress and clean mattress deck.	
Lubrication and mechanical	Lubricate all caster roller and swivel bearings with light machine oil.	
	Check all bolts and tighten as needed.	

⚠ **WARNING: The bed's electronic system contains no serviceable parts. Do not open the motors, cables, or pendant hand control. Only a Graham-Field authorized distributor or factory-trained personnel may perform service or adjustments on these components.**

9 LIMITED WARRANTY

SCOPE OF WARRANTY

GF Health Products, Inc. ("GF") warrants to the original purchaser only that it will replace or repair components, at GF's sole discretion, that are defective in material or workmanship under normal use and service. All warranties are conditioned upon the proper use of the products strictly in accordance with good commercial practice and applicable GF instructions and manuals, including proper use and maintenance. To the extent that a component is warranted by a third party, GF conveys all of its rights under that warranty to the original purchaser, to the extent permitted.

This limited warranty shall only apply to defects that are reported to GF's customer service team within the applicable warranty period and which, upon examination by GF or its authorized representative, prove to be a warranty item. This limited warranty is not transferable.

The warranted components and time period are set forth below:

Lumex Patriot US0208 / US0208PL Semi-Electric Homecare Bed: . . . . . 2 years
Lumex Patriot US0458 / US0458PL Full-Electric / Low Bed: . . . . . 2 years

The applicable warranty period shall commence from date of shipment to the original customer, unless there is an expiration date on the component in which case the warranty shall expire on the earlier of warranty period or the expiration date.

EXCLUSIONS

The warranty does not cover and GF shall not be liable for the following:

1) Defects, damage, or other conditions caused, in whole or in part, by misuse, abuse, negligence, alteration, accident, freight damage, tampering or failure to seek and obtain repair or replacement in a timely manner;
2) Products which are not installed, used, or properly cleaned and maintained as required in the official manual for the applicable product;
3) Products considered to be of a non-durable nature including, but not limited to: casters, filters, fuses, gaskets, lubricants, and charts;
4) Accessories or parts not provided by GF;
5) Charges by anyone for adjustments, repairs, replacement parts, installation or other work performed upon or in connection with such products which are not expressly authorized in writing, in advance, by GF;
6) Any labor or shipping charges incurred in the replacement part installation or repair;
7) Costs and expenses of regular maintenance and cleaning; and
8) Representations and warranties made by any person or entity other than GF.

ENTIRE WARRANTY, EXCLUSIVE REMEDY AND CONSEQUENTIAL DAMAGES DISCLAIMER

THIS WARRANTY IS GF'S ONLY WARRANTY AND IS IN LIEU OF ALL OTHER WARRANTIES, EXPRESS OR IMPLIED. GF MAKES NO IMPLIED WARRANTIES OF ANY KIND INCLUDING ANY IMPLIED WARRANTIES OF MERCHANTABILITY OR FITNESS FOR A PARTICULAR PURPOSE.

IF ANY MODEL OR SAMPLE WAS SHOWN TO THE CUSTOMER, SUCH MODEL OR SAMPLE WAS USED MERELY TO ILLUSTRATE THE GENERAL TYPE AND QUALITY OF THE PRODUCT AND NOT TO REPRESENT THAT THE PRODUCT WOULD NECESSARILY CONFORM TO THE MODEL OR SAMPLE IN ALL RESPECTS.

THIS WARRANTY IS LIMITED TO THE REPAIR OR REPLACEMENT OF THE DEFECTIVE PARTS. GF SHALL NOT BE LIABLE FOR AND HEREBY DISCLAIMS ANY DIRECT, SPECIAL, INDIRECT, INCIDENTAL, EXEMPLARY OR CONSEQUENTIAL DAMAGES, INCLUDING, BUT NOT LIMITED TO: DAMAGES FOR LOSS OF PROFITS OR INCOME, LOSS OF USE, DOWNTIME, COVER, OR EMPLOYEE OR INDEPENDENT CONTRACTOR WAGES, PAYMENTS AND BENEFITS.

The warranties contained herein contain all the representations and warranties with respect to the subject matter of this document, and supersede all prior negotiations, agreements and understandings with respect thereto. The recipient of this document hereby acknowledges and represents that it has not relied on any representation, assertion, guarantee, warranty, collateral contract or other assurance, except those set out in this document.

For additional information on this product or this warranty, please contact a GF Customer Service Representative.

NOTES:

1) Additional terms and conditions may apply.
2) Freight claims must be notated on the Bill of Lading and must be made with immediacy. The ICC regulations govern specific requirements for freight claims. Failure to abide by those regulations may result in a denial of the freight claim. GF will assist you in filing the freight claim.
3) Claims for any short shipment must be made within thirty (30) days of the invoice date.

GF Health Products, Inc.

10 INDEX

A

Assembly instructions 6

B

Bed end assembly 9

Bed end locking hardware, install 10

Bed extension kit, 84” 17

Bed height, low, full-electric 8

Bed height, standard, full-electric 8

Bed length adjustment 13

Bed operation 15

Bed rails 18

Bed rail safety 18

C

Caster position (full-electric bed only) 8

CAUTION statement, significance 3,?4

Crank operation (semi-electric bed only) 16

D

Deck height (high position) 17

Deck height (low position) 17

F

Full-electric 13

G

GF6500B-1 Assist Bar 19

GF6570A-1 Full Length Side Rail 21

GF6570B-1 Full Length Rail 20

GF6580BH-1 Quarter Rail 19

GF6590BH-1 Half No-Gap Head Rail 20

H

Head and foot assembly instructions 6

Hi/lo rod assembly 13

I

Info statement, significance 3

Introduction 3

L

Lumex universal bed rails 21

M

Maintenance, bed frame and sleeping surface 25

Maintenance, cleaning 25

Maintenance, electronics 25

Maintenance, lubrication and mechanical 25

Maintenance and safety checks 25

Motor assembly 7

Motor assembly troubleshooting 8

Motor slide caps, install 8

Motor slide caps, remove 7

N

NOTICE statement, significance 3

P

Patriot Liberty bed rail design 19

Pendant hand control operation, full-electric 15

Pendant hand control operation, semi-electric 15

Power failure; battery operation 15

S

Service parts, all models 22

Service parts, bed components 22

Service parts, bed end components 23

Specification, construction 17

Specification, weight 17

Specifications, dimensions 17

T

Thermal motor protection 5

Trendelenburg position 16

Trendelenburg position, reverse 16

W

WARNING statement, significance 3

Warranty 26

Weight capacity, maximum 3

GRAHAM-FIELD®

Manufactured by:
GF Health Products, Inc.

Proudly made in the U.S.A.