Hybrid Lifts

Installation and Owner's Manual

Harmar
America's Lift Leader™

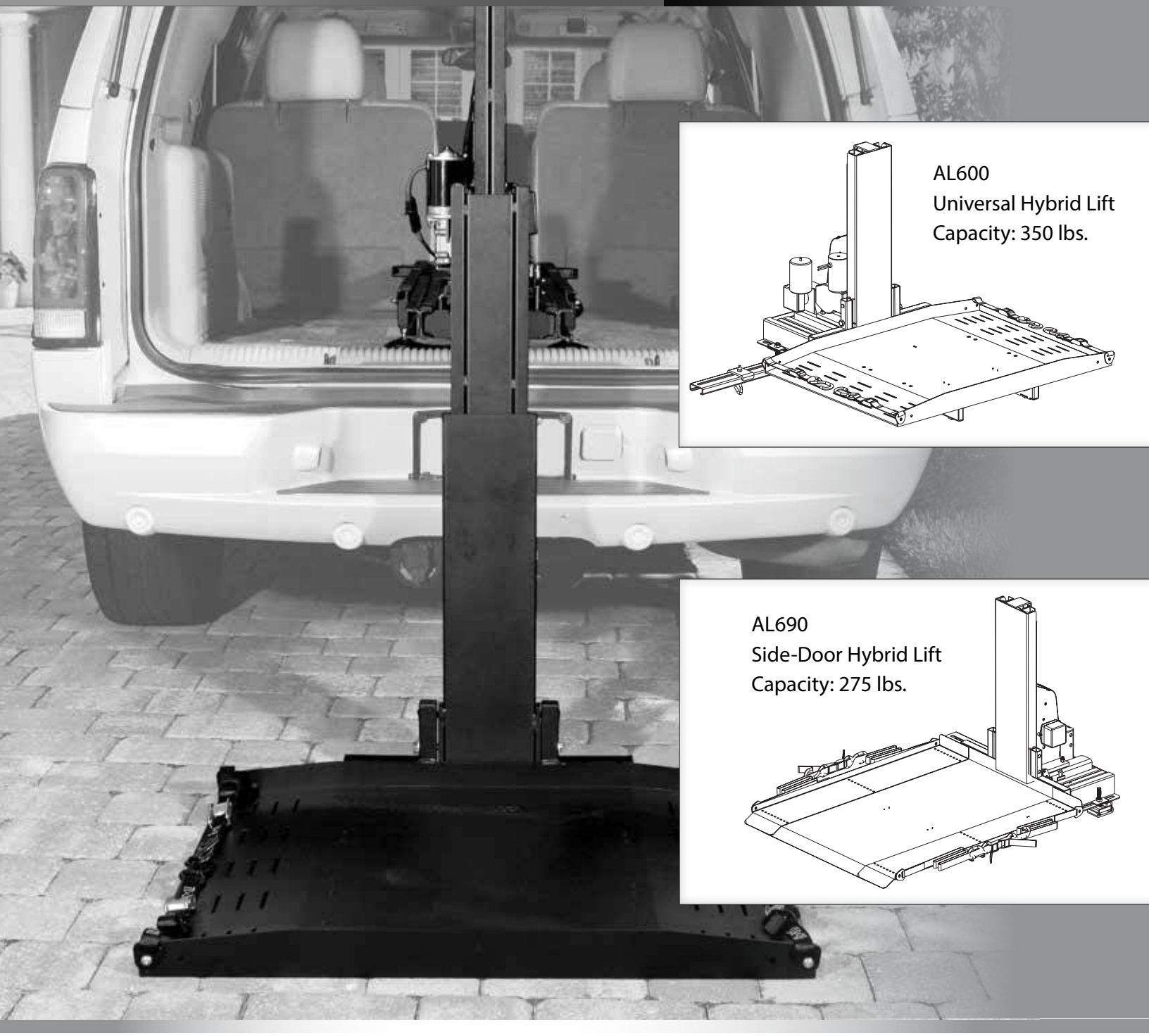

AL600
Universal Hybrid Lift
Capacity: 350 lbs.

AL690
Side-Door Hybrid Lift
Capacity: 275 lbs.

Read and understand this manual thoroughly before attempting to install or operate the lift. If you have any questions, please contact your Authorized Harmar Dealer or Harmar's Technical Service Department.

Dealer Name & Contact Information:

_____

_____

_____

Serial # of Your Lift: _____

Install Date: _____

Table of Contents

SECTION 1: OWNER

OPERATING YOUR LIFT 3-4

AL600 Operation 3

AL690 Operation 4

SAFETY & MAINTENANCE 5

SECTION 2: INSTALLER

PREPARATION

Tools Required 8

Unpacking the Lift 9

Installation Overview..... 10

Single Person Installation..... 11

INSTALLATION

Wiring the Vehicle..... 12

Installation 14

AL600 Installation w/removable 3rd row . . 14

AL600 Installation w/folding 3rd row 18

AL690 Installation 22

CHAIR / SCOOTER PREPARATION 27

TROUBLESHOOTING 29

EXPLODED VIEWS & PARTS LISTS

AL600 & AL690
Base Stage Assembly 32-33

AL600 & AL690
Middle Stage Assembly..... 34-35

AL600 &AL690
Horizontal Assembly 36-37

AL600 & AL690
Stop Rod and Micro Switch Assembly.... 38-39

AL600 & AL690
Drive Tower Assembly 40-41

AL600 & AL690
Tower Assembly..... 42-43

AL600 Platform Assembly..... 44-45

AL690 Platform Assembly..... 46-47

WIRING DIAGRAMS 48-49

SERVICE NOTES 48

SECTION 3: WARRANTY

WARRANTY 51

Read & Understand this Manual Prior to Installation or Operation. Please read, follow, and fully understand the installation section of this manual before beginning. Knowing the lift's adjustments and the tips on proper installation and operation techniques will save time, energy and avoid possible injury. If you do not understand any portion of installation or operation, please consult our technical service department or authorized mobility dealer.

NOTE: The following symbols indicate areas where you should take special care to avoid danger to individuals or property.

WARNING Hazardous situation. If not avoided, could result in serious injury to installer or user.

CAUTION Hazardous situation. If not avoided, could result in serious damage to property.

© 2014 Harmar Mobility, LLC • All Rights Reserved

LOADING & SECURING YOUR CHAIR

Lower the Lift Platform. Using your remote control, lower the lift platform until it reaches the ground and becomes level. **Do NOT** over-lower to the point where the vehicle begins to rise or the platform rises with the "DOWN" button pressed. This will damage the lift or cause the lifting system to back drive.

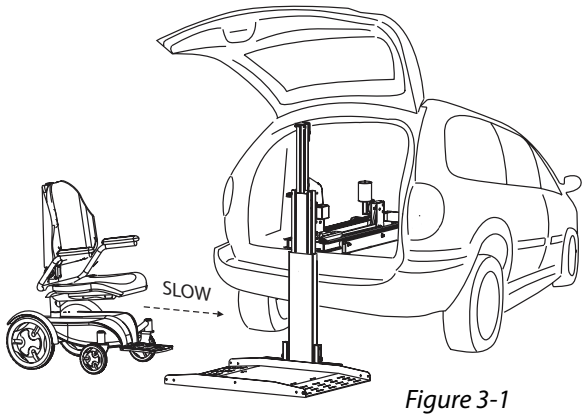

Figure 3-1

1. **Drive Chair/Scooter onto Platform.** Set your chair or scooter's speed control to slow speed to maneuver easily onto the platform. *[Figure 3-1]* You can drive onto the platform from either side.

2. **Secure the Chair.** Each corner of the AL600 platform has a restraint attached, with a hook on the end. Place each hook in either the anchor plate slot or in each U-bolt. *[Figure 3-2]*

   Pull the loose end of each restraint tight. To release, simply press the release tab and remove the hooks. *[Figure 3-3]*

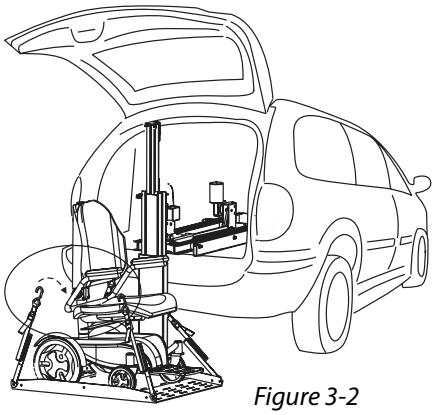

Figure 3-2

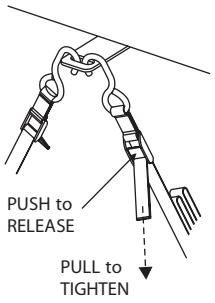

Figure 3-3

3. **Fold Seat Backs.** If your chair has a folding seat back, you may want to place it in the down position for easier clearance when loading the chair into the vehicle. Depending on the size of your chair, you may need to remove the headrest as well.

4. **Raise the Chair.** Double-check that the chair is secured properly on the platform. While holding the hand control, stand to the side and away from the lift. Press the "UP" button. *[Figure 3-4]*

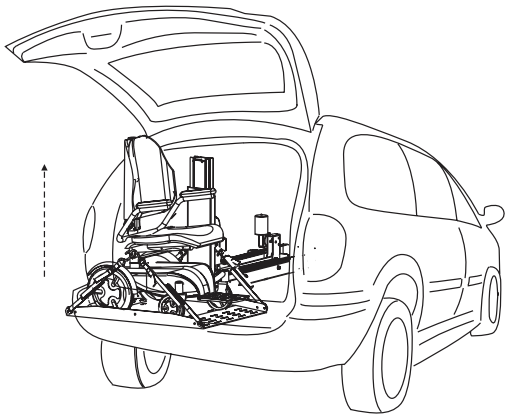

Figure 3-4

The platform will rise and retract into the vehicle. When the platform stops retracting release the button. The platform will automatically lock itself into travel position. Close the door slowly, making sure that no part of the chair or other objects in the cargo area contact the door.

LOADING & SECURING YOUR CHAIR

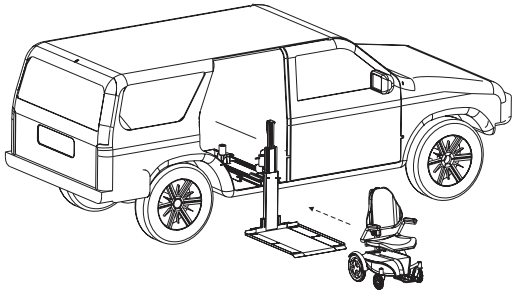

Figure 4-1

1. **Lower the Lift Platform.** Using your remote control, lower the lift platform until it reaches the ground and becomes level. **Do NOT** over-lower to the point where the vehicle begins to rise or the platform rises with the "DOWN" button pressed. This will damage the lift or cause the lifting system to back drive.

2. **Drive Chair/Scooter onto Platform.** Set your chair or scooter's speed control to slow speed to maneuver easily onto the platform. *[Figure 4-1]*

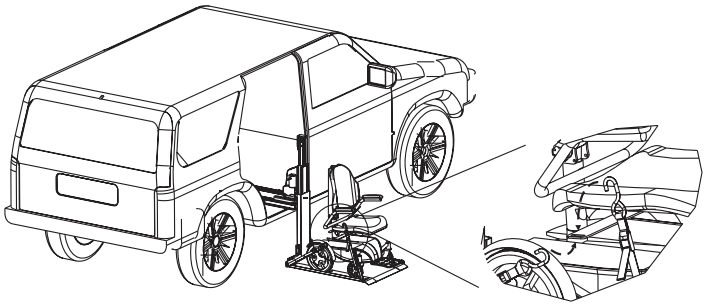

Figure 4-2

3. **Secure the Chair.** Each corner of the AL690 platform has a restraint attached, with a hook on the end. Place each hook in either the anchor plate slot or in each U-bolt. *[Figure 4-2]*

   Pull the loose end of each restraint tight. To release, simply press the release tab and remove the hooks. *[Figure 4-3]*

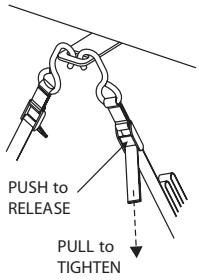

Figure 4-3

4. **Fold Seat Backs.** If your chair has a folding seat back, you may want to place it in the down position for easier clearance when loading the chair into the vehicle. Depending on the size of your chair, you may need to remove the headrest as well.

5. **Raise the Chair.** Double-check that the chair is secured properly on the platform. While holding the hand control, stand to the side and away from the lift. Press the "UP" button. *[Figure 4-4]*

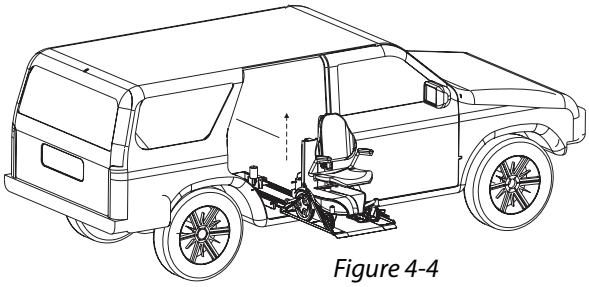

Figure 4-4

The platform will rise and retract into the vehicle. When the platform stops retracting, release the button. The platform will automatically lock itself into travel position. Close the door slowly, making sure that no part of the chair or other objects in the cargo area contact the door.

© 2014 Harmar Mobility, LLC • All Rights Reserved

WARNING

This lift is NOT meant for human transport. The chair or scooter MUST be unoccupied before operating the lift. Each lift is designed to transport a specific chair only. DO NOT attempt to move any mobility devices, objects, people, or materials other than those for which the lift was intended.

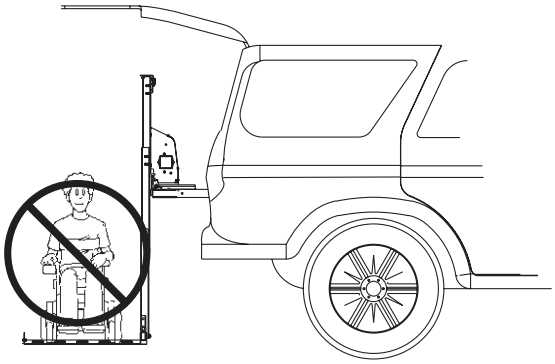

CAUTION

Do not allow anyone to use this lift unless they are properly instructed on operational and safety procedures.

WARNING

When using the lift, keep your hands and feet from under the platform.

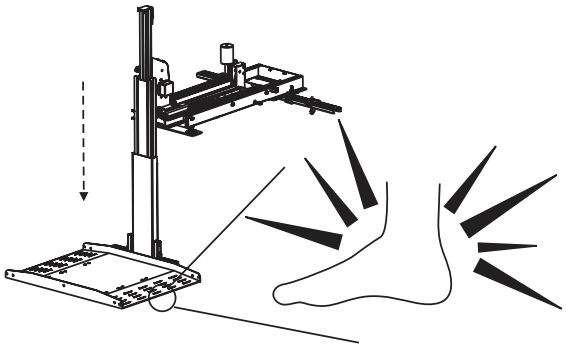

IMPORTANT

Your Hybrid Lift has been engineered for years of trouble-free use, but as with any mechanical system, daily use may result in some parts becoming loose or worn.

Check regularly for any worn, lose, or damaged parts of your lift. If you note any issues, do NOT use the lift. Contact your dealer or installer of the lift for repairs. Failure to act may cause severe injury or damage to property.

Use your Hybrid Lift only for loading and unloading the scooters and power chairs for which it is intended. If your combination of vehicle and scooter/chair changes, for example if you buy a different vehicle or upgrade your mobility device, please consult your installer or dealer. The original equipment may not configure the same. Do not add to or modify any part of the lift system without first consulting the lift manufacturer. Any modifications may void warranties, as well as, hinder the structural integrity of the lift.

MAINTENANCE

This Hybrid Lift is designed to be as trouble-free as possible, but as with any mechanical device, regular maintenance will help ensure that it continues to offer reliable and safe use for years to come.

Schedule a maintenance inspection.
We recommend that you schedule a preventative maintenance inspection with your dealer at least once a year on motors, lift frame, wiring harnesses, and all moving parts of the lift.

Check for paint chips and touch up bare metal.

Use a good gloss black enamel or lacquer to inhibit rust. You may need to do this more frequently if your lift is subject to salt air or road salt.

© 2014 Harmar Mobility, LLC • All Rights Reserved

PROFESSIONAL INSTALLATION RECOMMENDED

NOTE: The following section is designed for the professional installer. We strongly recommend that a certified dealer install the lift and instruct the user on correct operation and establish a safety and maintenance schedule.

If you do not understand any portion of installation or operation, please consult our technical service department or authorized mobility dealer. Do not attempt to install or use this lift with any hesitation or question. Serious injury or damage can result if proper procedures are not followed.

READ & UNDERSTAND THIS MANUAL

Prior to Installation or Operation. Having an overall understanding of the lift and proper installation techniques will help you save time, energy, and avoid possible injury.

TOOLS REQUIRED

Installations may vary to some degree, but below are the basic tools to have on hand for an Hybrid Lift installation.

SOCKET SET
Specifically
9/16″
7/16″
3/4″
3/8"

WRENCH SET
Specifically
9/16″
7/16″
3/4″

ALLEN WRENCH SET
Specifically
1/8″
3/16″
5/16″

WIRE CUTTERS

NEEDLE NOSE PLIERS

#2 FLAT HEAD SCREWDRIVER

#2 PHILLIPS HEAD SCREWDRIVER

MARKING IMPLEMENT

TAPE MEASURE

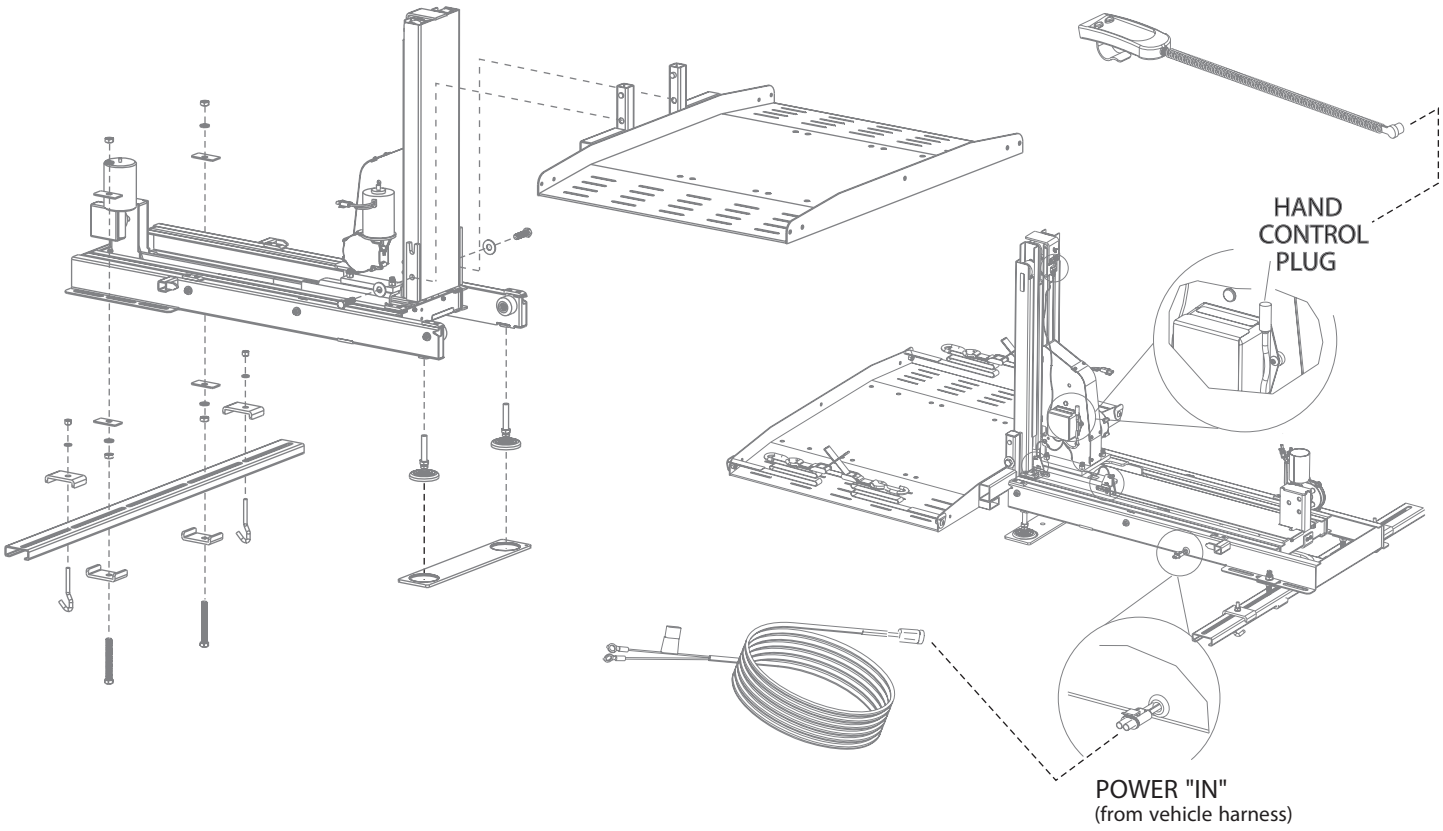

© 2014 Harmar Mobility, LLC • All Rights Reserved

UNPACKING THE LIFT

Check the box contents. Review each part against the packaging checklist to ensure that all parts have been included. If any parts are missing or damaged, immediately contact the dealer who sold the lift.

Do not attempt to install or use a lift that has missing or damaged parts.

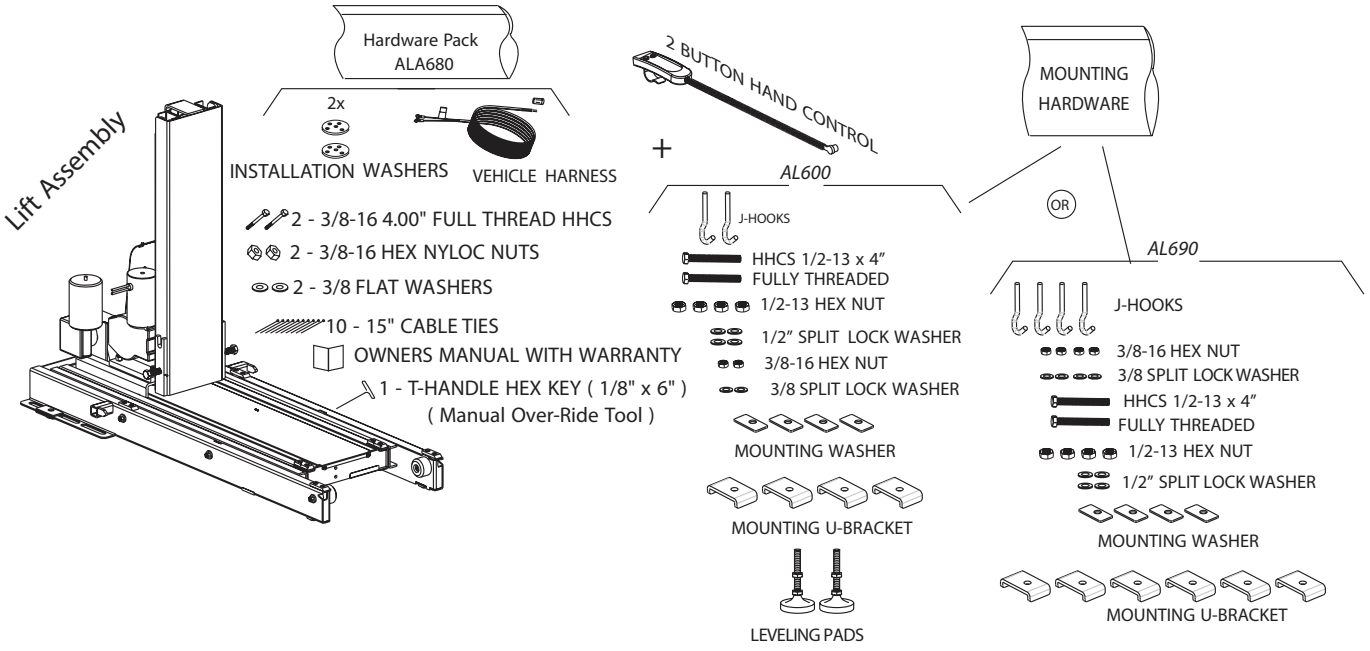

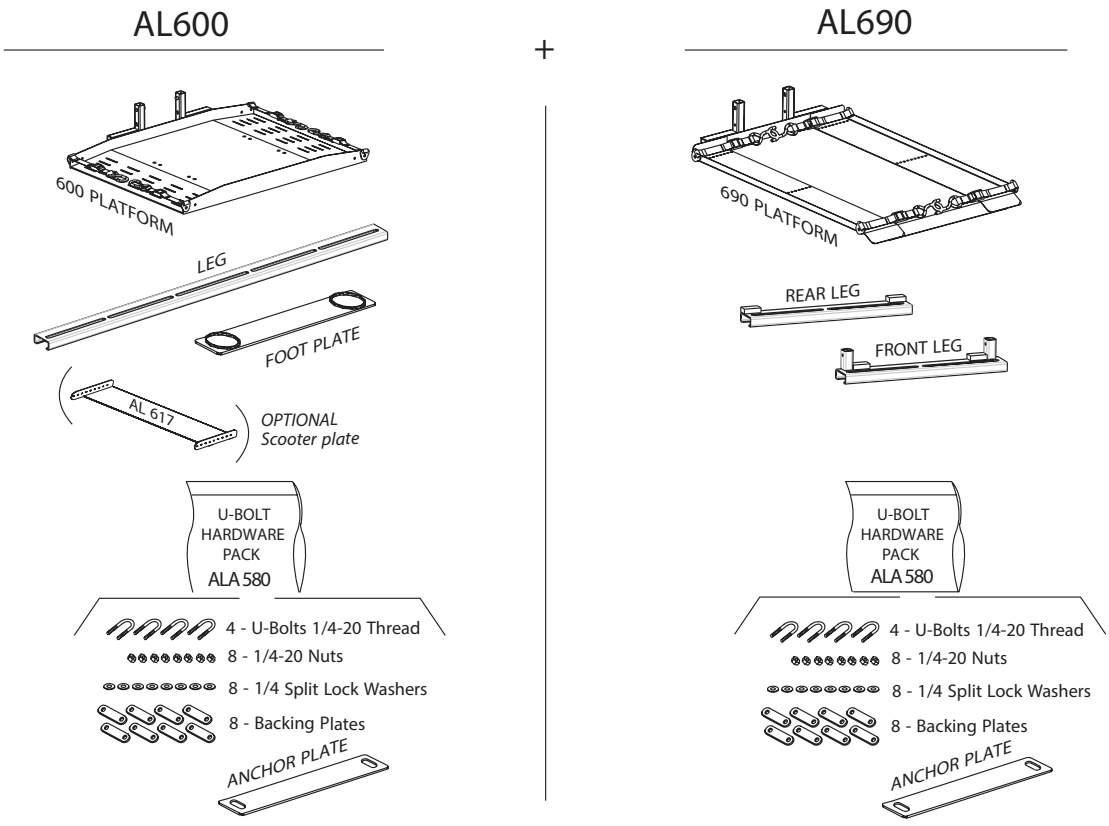

WARNING

Never attempt to pick up the lift from the box, ground or on/off a vehicle alone. Two people should work together to place this lift inside a vehicle.

If only one person is available, please follow the short disassembly procedure on next page.

Overview – Installation Procedure

1. **Install Wiring Harness.** See page12. Installing the wiring harness first will ensure you have power to the lift during installation. This allows access to platform assembly outside the vehicle and at waist level. (If you skip this step, use a 12V shop battery.)

2. **Remove Seating & Determine Lift Placement.** Remove seating. For AL600 (page 14) this is usually the third row; for AL690 (page 22), second row. Determine mounting range by climbing inside cargo area and closing access door. Measure from inside the door threshold to determine the lift's fully-stowed placement. For the AL600, measure to 43"; for AL690, measure to 55." *[Figure 10-1*]

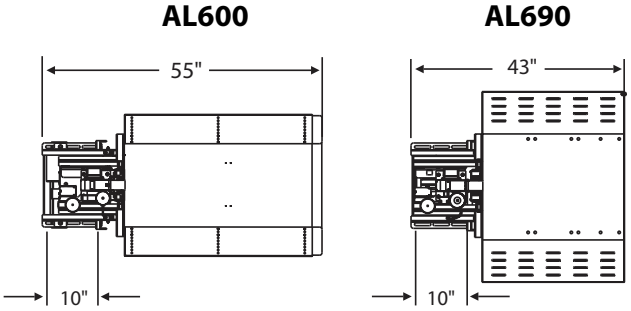

Figure 10-1

Look at the floor in the mounting area. If seat removal reveals seat attachment points, or "dog bones," you will not need to drill.

If no attachment points exist in the area, you will need to drill two 3/8" holes approximately 1" to 10" from your measurement point. (See installation section for details.)

© 2014 Harmar Mobility, LLC • All Rights Reserved

Single Person Installation Option

- We recommend two people install the lift together. If only one person is available, a few extra steps make the lift lighter and more manageable to permit installation.
- Remove connections at limit switch and remove power connections at 4-way plug. *[Figure 11-1]*
- Remove 4 nuts at tower base . *[Figure 11-2]*
- Lift tower straight up to remove from base. *[Figure 11-3*]
- Install base as instructed later in manual.
- Re-attach tower once the base is mounted in the vehicle. Re-connect 4-way and limit switches connectors.

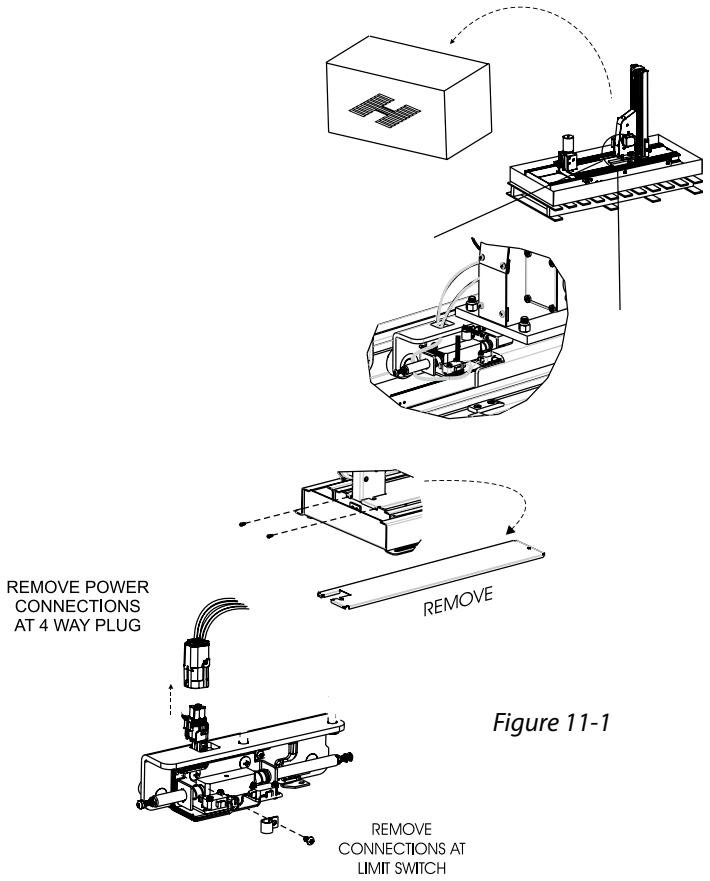

Figure 11-1

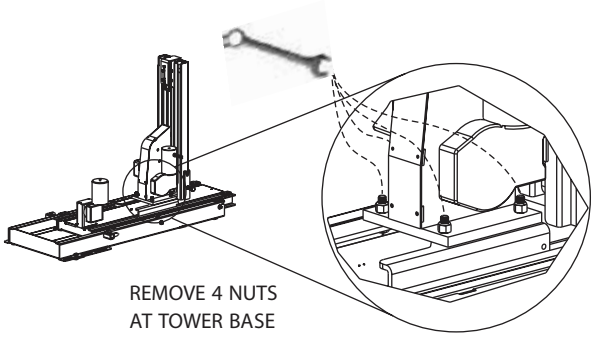

Figure 11-2

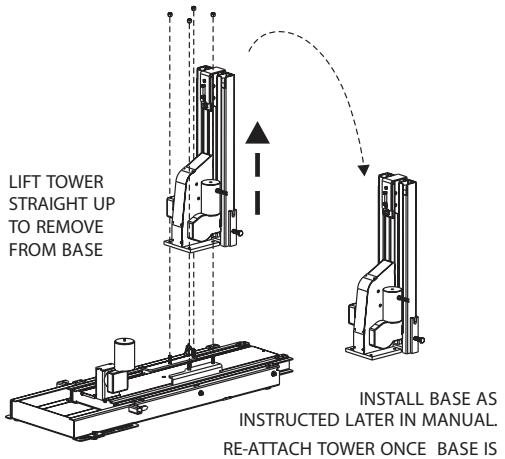

Figure 11-3

Improper Wiring is the #1 Cause of Problems in the Operation of a Vehicle Lift. Follow the Wiring Instructions Carefully

The vehicle wiring harness is located in the hardware pack. The harness is manufactured to comply with SAE J1128 requirements. It is approximately 23 feet long and will accommodate most vehicles.

Instructions

1. **Unwind the wiring harness and lay it flat.** One end of the harness has 2 covered pins. This is the lift end and goes to the rear cargo area where the lift will mount.

   The wiring harness is unassembled for easier installation. The end connector is included separately from the harness to enable the installer to run the wire under and through the vehicle with the smallest clearance possible.

2. **Route the wire harness beginning at the battery.** Attach the black wire to the negative terminal on the battery. *[Figure 12-1]*
   Do NOT connect the red wire to the battery until the very end.

3. **Run the vehicle harness under and, when possible, through the vehicle back to the rear cargo area/trunk**, gaining entry into the vehicle through the firewall. *[Figure 12-2]*
   If you want to run the harness under the vehicle, you will most likely need to drill a hole to get the wire into the rear cargo area/trunk. Use the supplied 3/8 grommet in the hole to protect the wire.

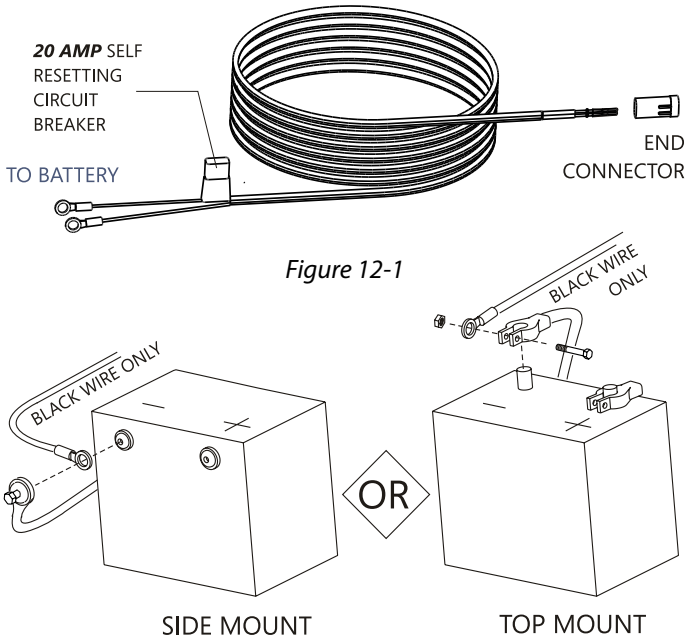

Figure 12-1

CAUTION

Never attempt to connect the harness to a secondary power source. Always connect both leads directly to the battery.

IMPORTANT

If the installation requires the wiring harness to run on the underside of the vehicle, route it away from exhaust system, brake lines, fuel lines, gas tank and any moving parts. Avoid pinch points and sharp edges. Avoid locating the harness where it can be snagged by road debris.

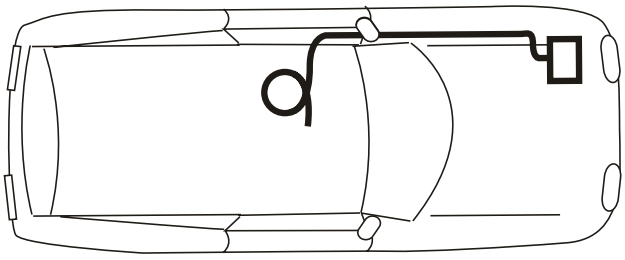

Figure 12-2

CAUTION

Do NOT run wiring where it can be snagged by road debris.

Do NOT run wiring near the gas tank.

© 2014 Harmar Mobility, LLC • All Rights Reserved

CAUTION

If the harness is too long for the vehicle, coil the excess wire and secure it to the vehicle frame with the supplied tie wraps.

Do NOT cut or shorten the harness

4. **When harness is through the vehicle**, remove the pin's protective tubing. *[Figure 13-1]*

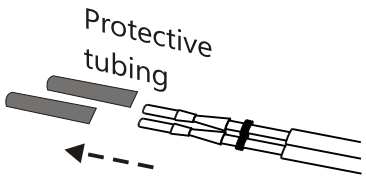

Figure 13-1

NOTE: Troubleshooting with a test light or voltage meter may give a false indication.

When you probe for 12 volts, the reading may indicate a connection, even if the connection is not necessarily sufficient. The lift's motor can draw up to 20 Amps at some points, requiring all of the available wire to flow proper current. Poor connections are the #1 problem associated with a slow, intermittent, warm, poorly performing motor which will also deteriorate prematurely.

If a single strand of a multi-strand wire is making contact, 12V will appear on a meter or test light, but it will not allow the motor to operate. It is always best to test both current and voltage, or run the motor with known good shop battery or power source when troubleshooting.

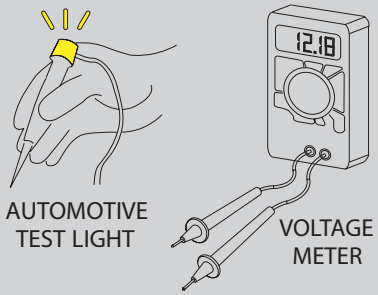

5. **Inspect the pin's retaining flanges.** The flanges may have been deformed while being run through the vehicle. These are critical to secure the pins inside the connector. Adjust as needed. *[Figure 13-2]*

6. Flip open end connector's hinged retainer.
   - Insert pins as shown. *[Figure 13-3]*
   - Verify the wires cannot be pulled out by moderately pulling on the wires. Be sure rubber seals are inside the back of the connector.
   - Close the hinged retainer.
   - Plug connector into lift.

7. Last, attach red wire to the positive terminal on the battery. [*Figure 13-4]*

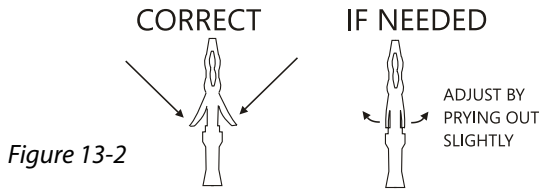

Figure 13-2

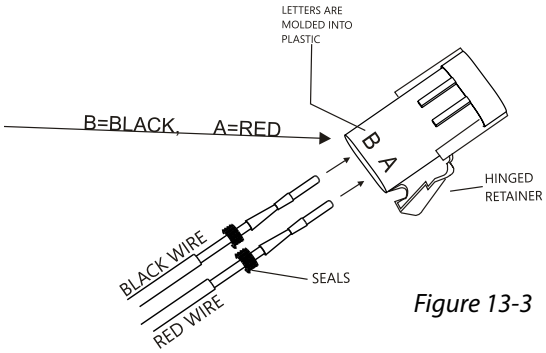

Figure 13-3

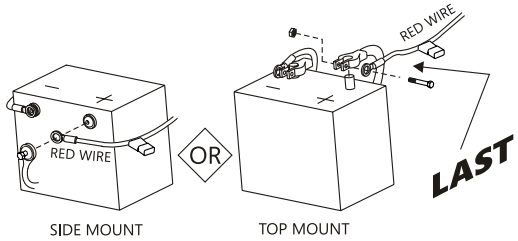

Figure 13-4

1. Remove 3rd Row Seating. *[Figure 14-1]*

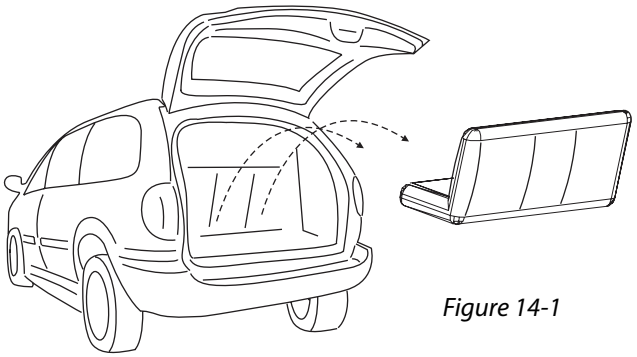

Figure 14-1

2. The AL600 Leg must be mounted between 32″ and 42″ from the internal surface of the closed back door of the vehicle. *[Figure 14-2]*

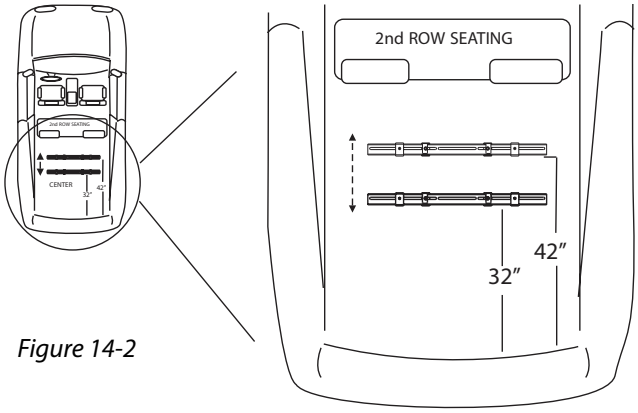

Figure 14-2

3. Examine the Floor for Additional Seat Attachment Points. These must be recessed into the floor. *[Figure 14-3]*

IMPORTANT:

Attachment Points MUST be FLUSH or LOWER than the floor.

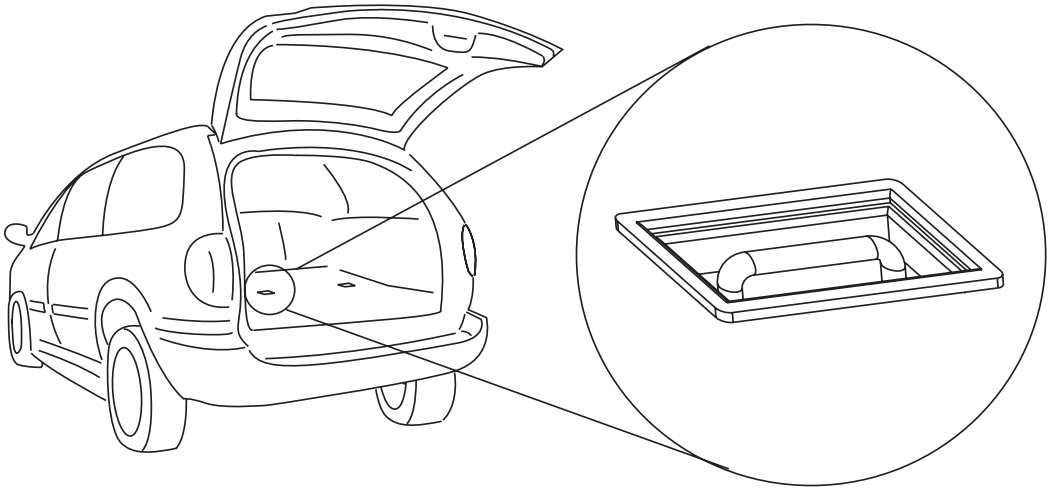

Figure 14-3

© 2014 Harmar Mobility, LLC • All Rights Reserved

Installation - AL600

With Removable 3rd Row Seating

4 A. If Seat Attachment Points ARE Available: See *Figure 15-1* for mounting diagram.

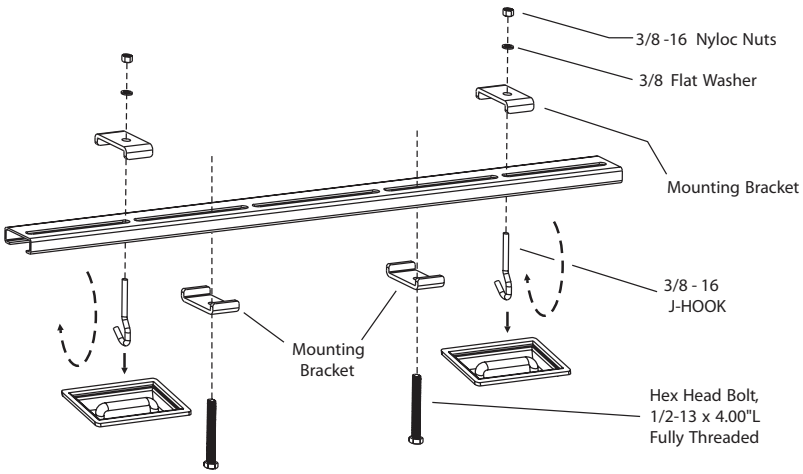

Figure 15-1

4 B. If Seat Attachment Points are NOT Available: Look under vehicle in approximate area where Leg will need to be mounted. See *Figure 15-2* for mounting diagram.

Drill a pilot hole first, up from under the vehicle to ensure nothing will be damaged.

Find hole from inside vehicle and drill 3/8" hole down through vehicle's floor.

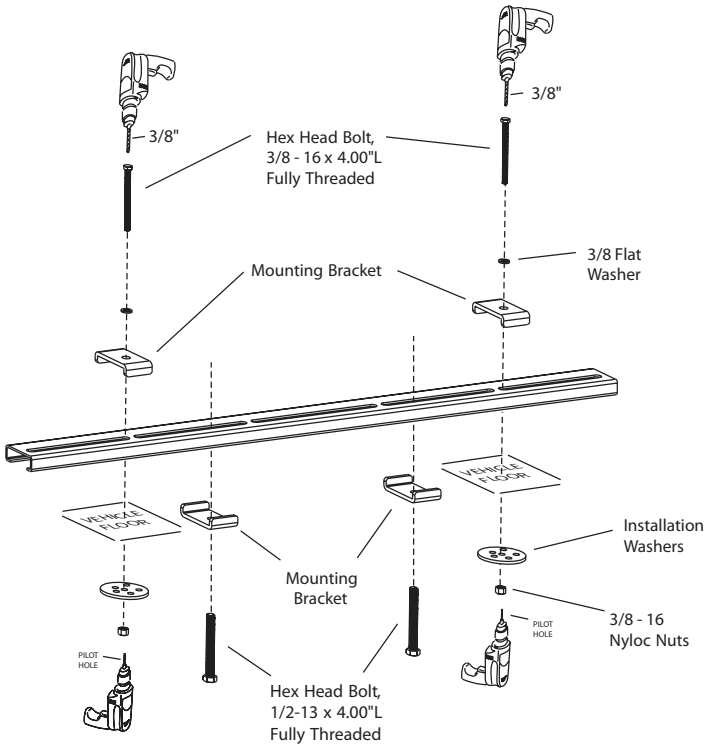

Figure 15-2

CAUTION

USE EXTREME CAUTION

Avoid Gas Tank, Fuel / Brake / Electrical Lines

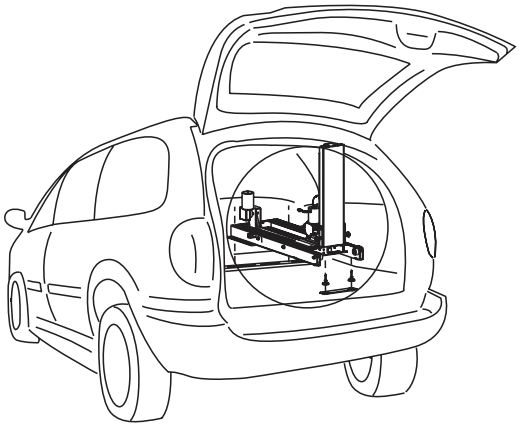

7. Place mounting washers on bolts, on top of mounting flange on lift. Place ½" lock washers onto bolts. Thread ½-13 nuts onto bolts.

5. Thread ½-13 nuts onto ½-13 x 4.00" L bolts. Place ½" lock washers onto bolts. Place mounting washers onto bolts.

6. Use an assistant to place lift onto bolts through mounting flange on lift as shown.

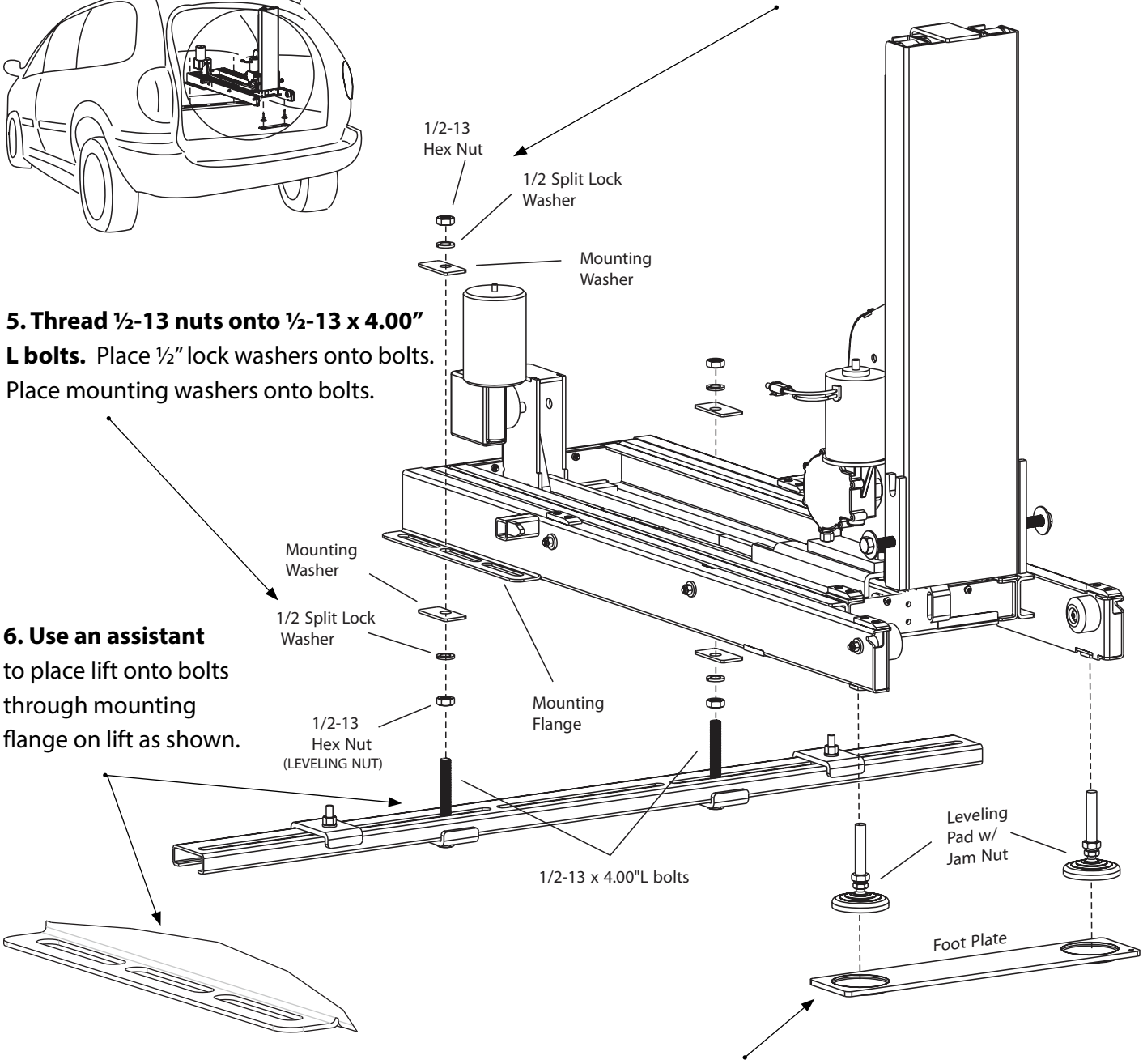

WARNING

If no assistant is available, follow instructions on page 11 to avoid injury.

8. Lift front end of lift and install leveling pads as shown. Place foot plate under leveling pads. Lower lift and check with a level. Adjust by threading nut on leveling pads and threading bottom nut under mounting flange.

© 2014 Harmar Mobility, LLC • All Rights Reserved

8. Plug hand controller into lift. *[Figure 17-1]*
Connect to vehicle harness. *[Figure 17-2]*

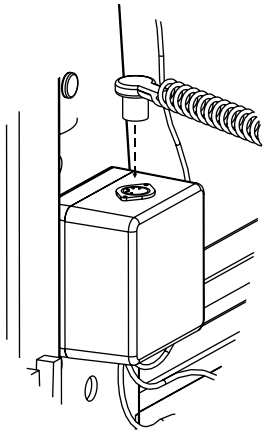

Figure 17-1

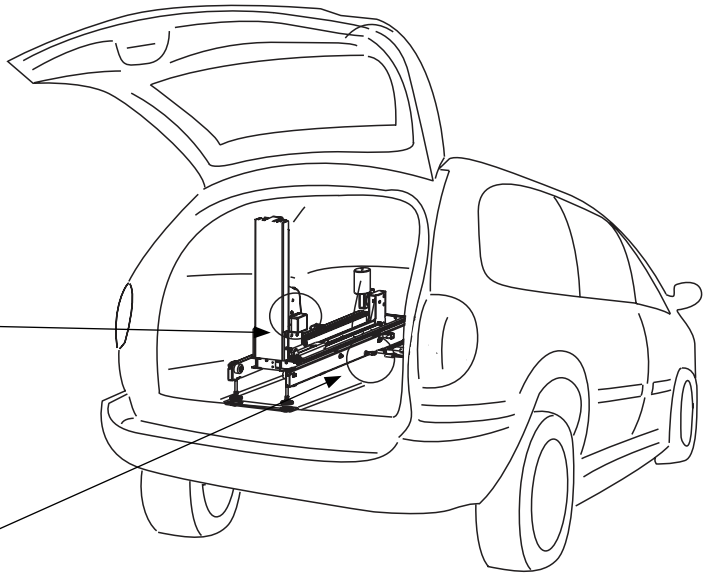

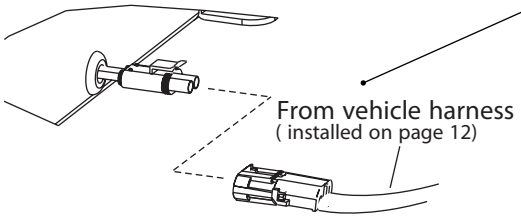

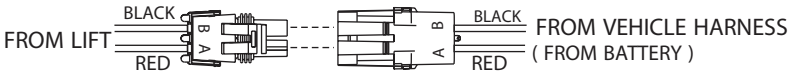

Figure 17-2

9. Press the DOWN button until the lift's tower has moved out of the vehicle. *[Figure 17-3]*

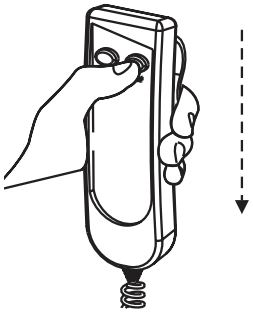

Figure 17-3

10. Attach platform by placing platform's upright pins into u-shaped bracket on tower. *[Figure 17-4]*

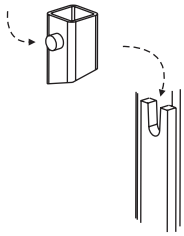

Figure 17-4

11. Thread ½-13 x 1-3/4" L Hex head Bolts and ½" washers into threaded holes as shown. *[Figure 17-5]* Test full motion of lift into and out of the vehicle. Be sure lift is level and no obstructions interfere with platform travel.

Tighten all fasteners from all steps at this time.

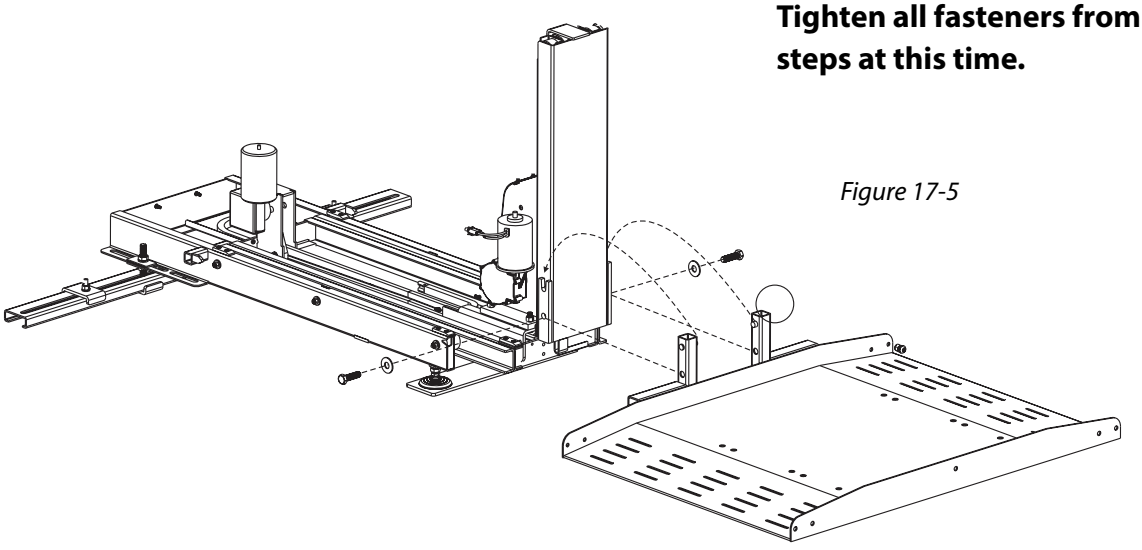

Figure 17-5

NOTE: A BA-02 Kit is needed for this installation. More detailed instructions on BA-02 installation will be provided with the BA-02 Kit.

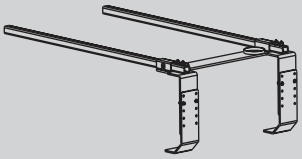

1. Fold 3rd Row seating up, exposing the storage well. *[Figure 18-1]*

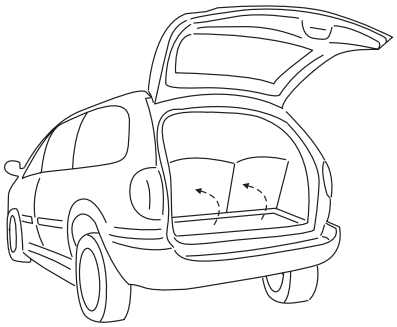

Figure 18-1

2. Measure the height of the well. *[Figure 18-2]*

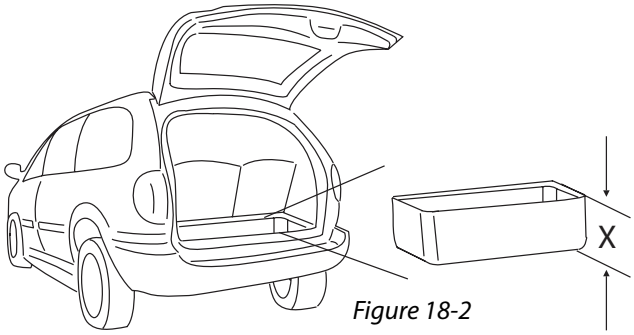

Figure 18-2

3. Position brackets as shown. Slide up or down until you achieve the measured well height. (Holes are arranged for ¼" increments) *[Figure 18-3]*

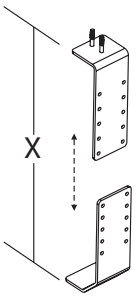

Figure 18-3

4. Attach brackets together **and fasten using** supplied hardware. *[Figure 18-4]*

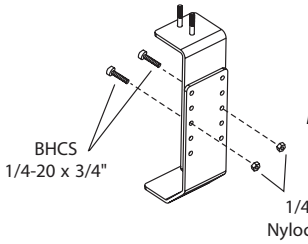

Figure 18-4

5. Position assembled parts around third row seat(s) then fold into well. *[Figure 18-5]*

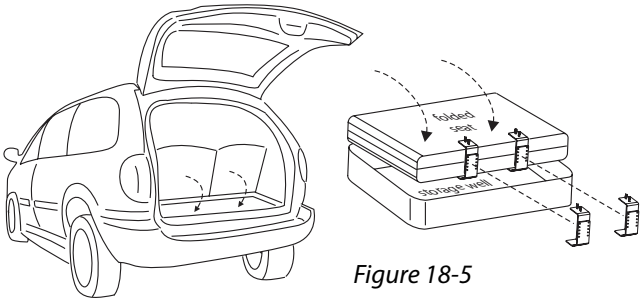

Figure 18-5

6. Install set screws (leave loose) as shown. Slide foot plate assembly onto legs. *[Figure 18-6]*

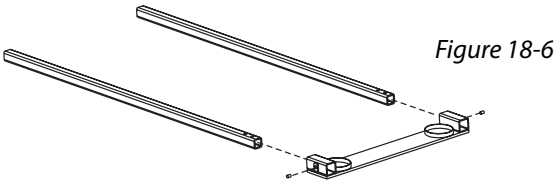

Figure 18-6

7. Attach rails to brackets. *[Figure 18-7]*

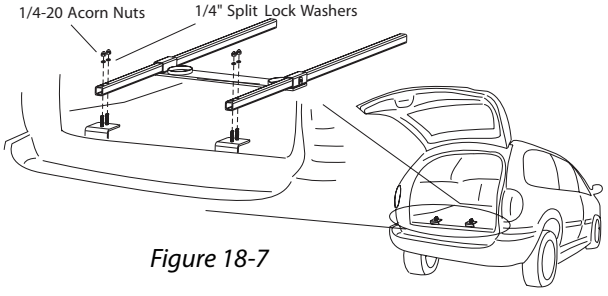

Figure 18-7

© 2014 Harmar Mobility, LLC • All Rights Reserved

Installation - AL600
With Folding 3rd Row Seating

8. With BA-02 installed in rear cargo area, examine floor for area to install leg assembly. *[Figure 19-1]*

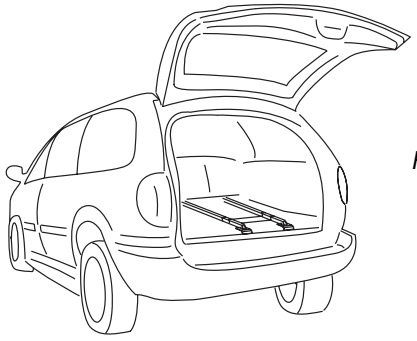

Figure 19-1

9. The AL600's leg will need to be mounted between 32″ and 42″ from the internal surface of the closed back door of the vehicle.

Examine the floor for additional seat attachment points recessed into the floor. *[Figure 19-2]*

IMPORTANT:

Attachment Points MUST be FLUSH or LOWER than the floor.

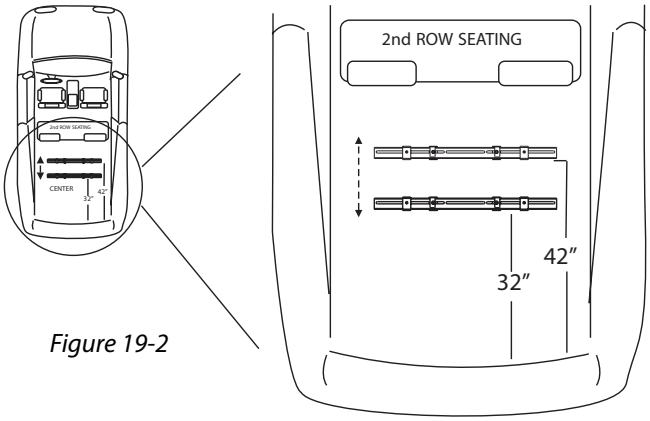

Figure 19-2

CAUTION

USE EXTREME CAUTION

Avoid Gas Tank, Fuel / Brake / Electrical Lines

10 A. If Seat Attachment Points ARE Available: See *Figure 19-3* for mounting diagram.

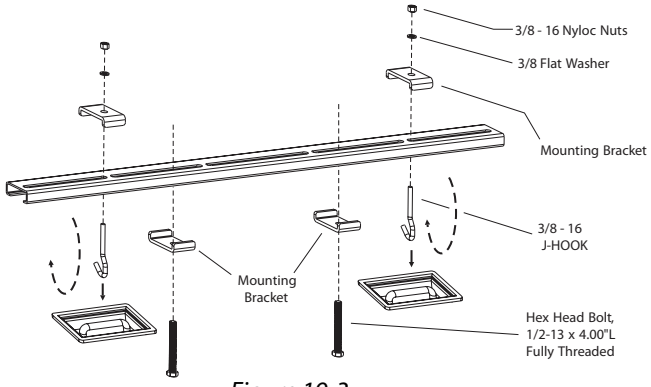

Figure 19-3

10 B. If Seat Attachment Points are NOT Available: Look under vehicle in approximate area where Leg will need to be mounted.

Drill a pilot hole first, up from under the vehicle to ensure nothing will be damaged. *[Figure 19-3]*

Find hole from inside vehicle and drill 3/8″ hole down through vehicle's floor. *[Figure 19-4]*

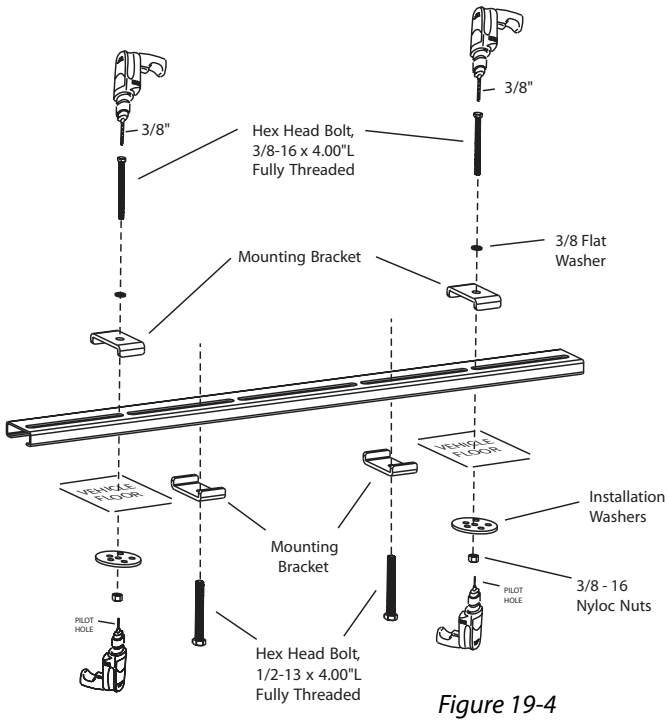

Figure 19-4

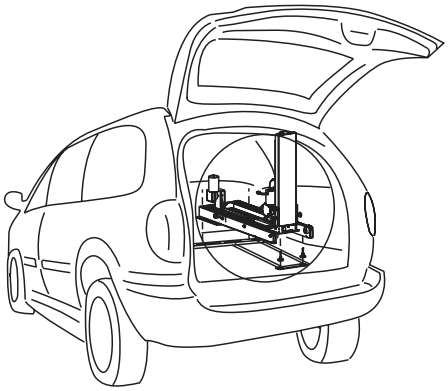

11. Thread ½-13 nuts onto ½-13 x 4.00" L bolts. Place ½" lock washers onto bolts. Place mounting washers onto bolts.

13. Place mounting washers on bolts, on top of mounting flange on lift. Place ½" lock washers onto bolts. Thread ½-13 nuts onto bolts.

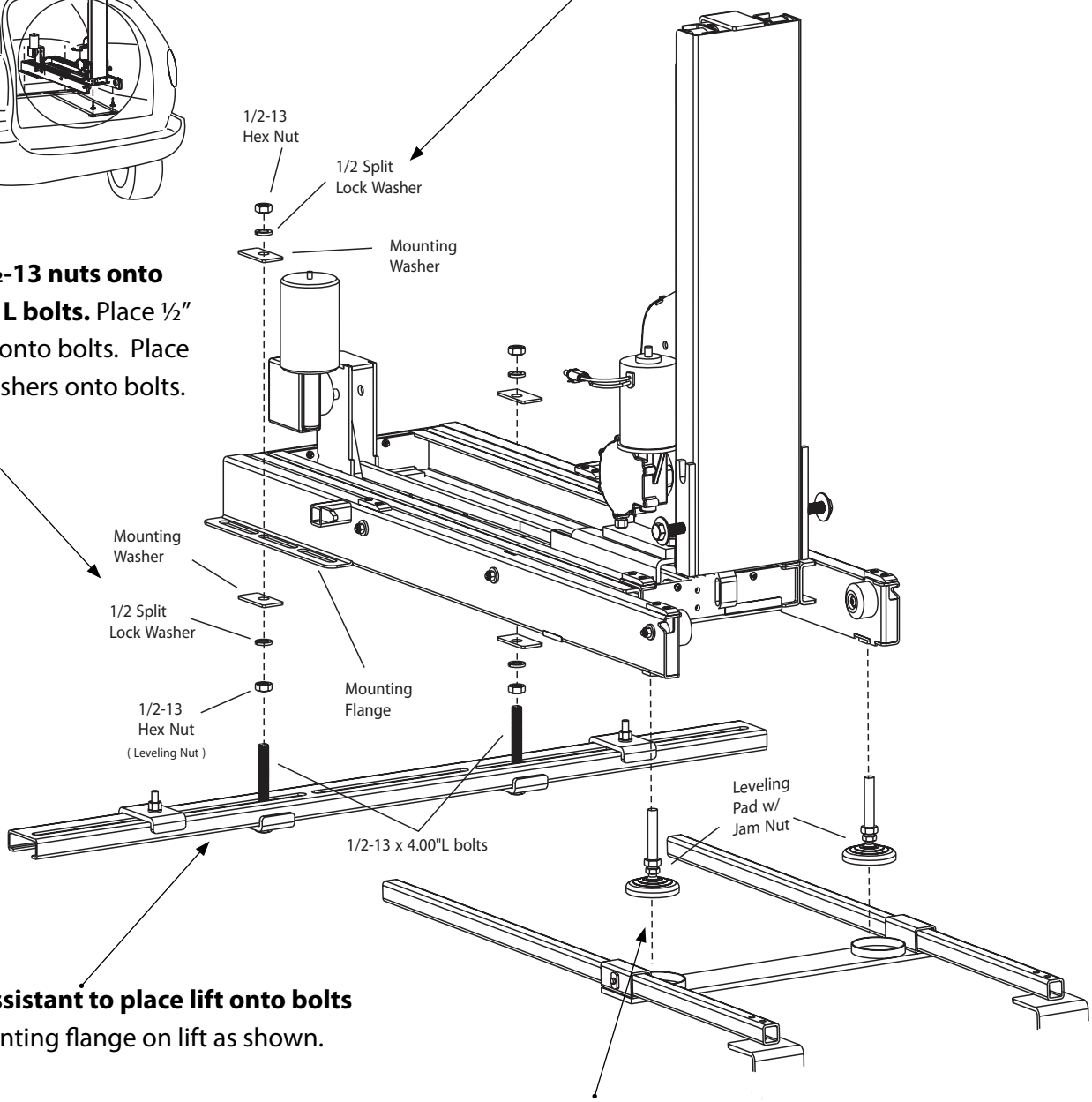

12. Use an assistant to place lift onto bolts through mounting flange on lift as shown.

WARNING

If no assistant is available, follow instructions on page11 to avoid injury.

14. Lift front end of lift and install leveling pads as shown. Place pads into circular cups of BA-02 as shown. Lower lift and check with a level.

Adjust by threading nuts on leveling pads and threading bottom nut under mounting flange.

© 2014 Harmar Mobility, LLC • All Rights Reserved

15. Plug hand controller into lift. *[Figure 21-1]*
Connect to vehicle harness. *[Figure 21-2]*

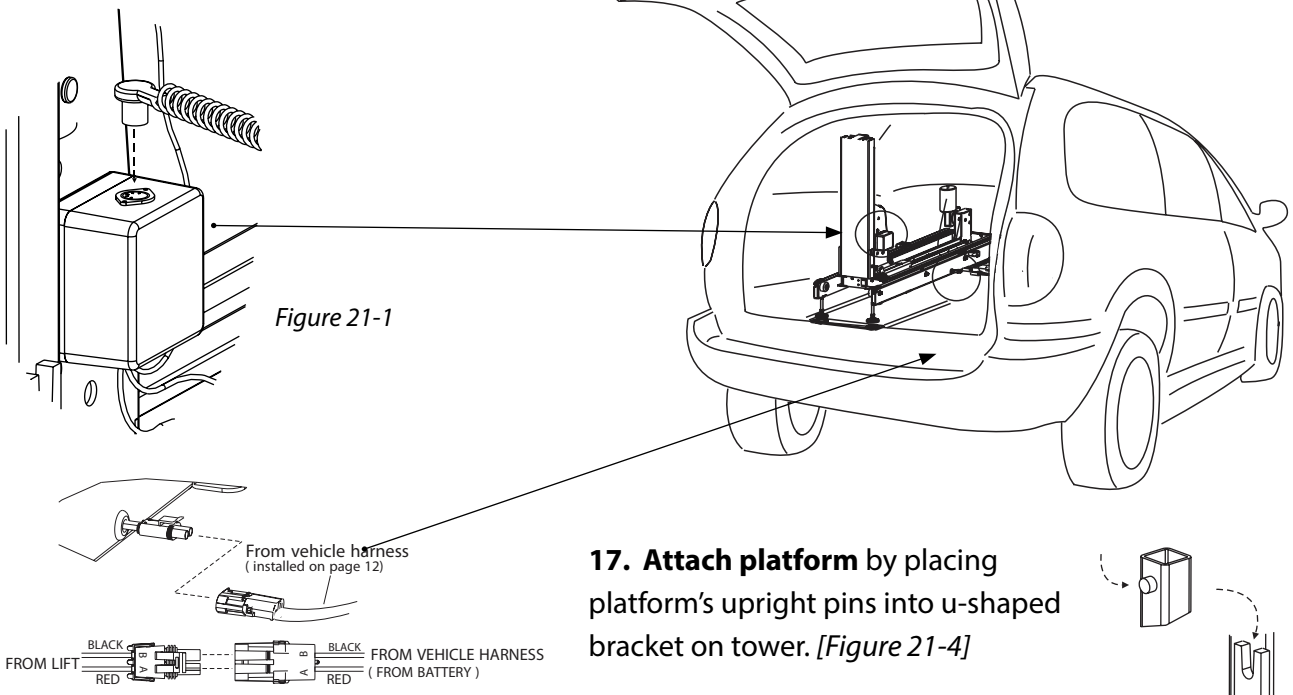

Figure 21-1

Figure 21-2

16. Press the DOWN button until the lift's tower has moved out of the vehicle. *[Figure 21-3]*

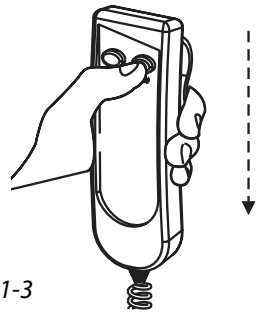

Figure 21-3

17. Attach platform by placing platform's upright pins into u-shaped bracket on tower. *[Figure 21-4]*

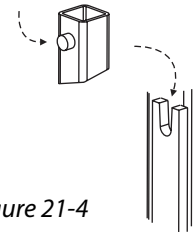

Figure 21-4

18. Thread ½-13 x 1-3/4" L Hex head Bolts and ½" washers into threaded holes as shown. *[Figure 21-5]* Test full motion of lift into and out of the vehicle. Be sure lift is level and no obstructions interfere with platform travel.

Tighten all fasteners from ALL steps at this time.

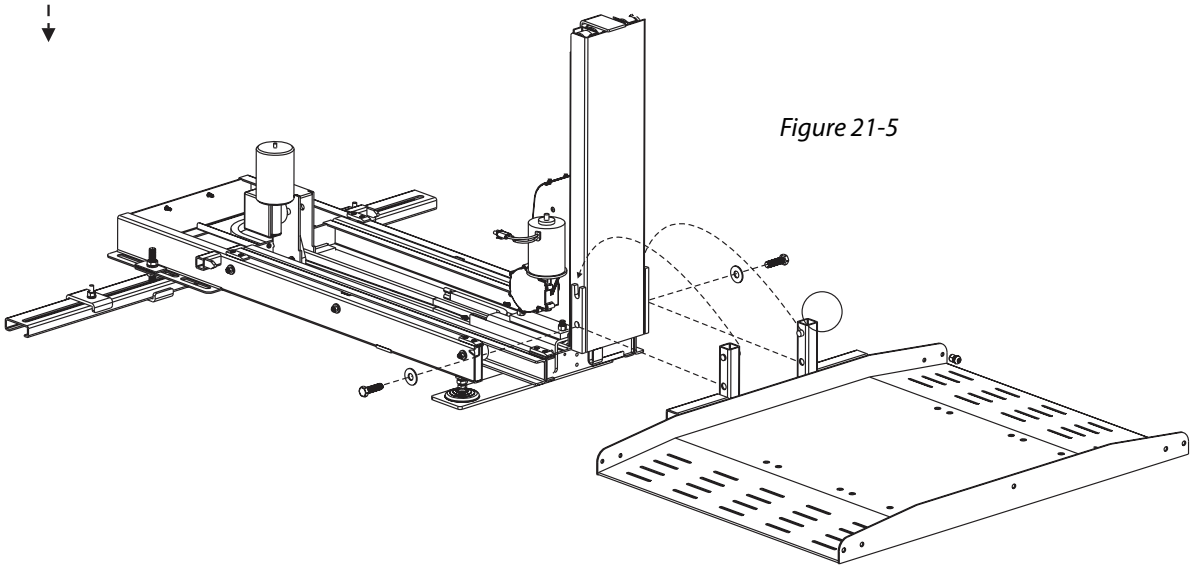

Figure 21-5

1. Remove 2nd Row Seating. *[Figure 22-1]*

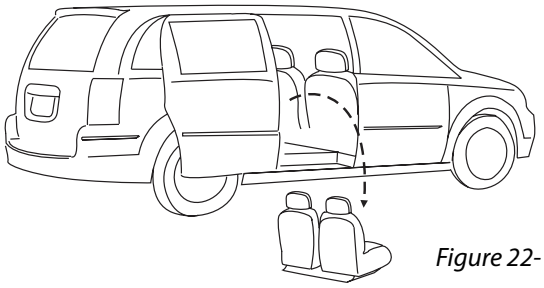

Figure 22-1

2. Installing the Front Leg. The AL690's front leg must be mounted between 42" and 52" from the internal surface of the closed side door of the vehicle.

Examine floor area for remaining seat attachment points that are recessed into the floor. *[Figure 22-2]*

IMPORTANT:

Attachment Points MUST be FLUSH or LOWER than the floor.

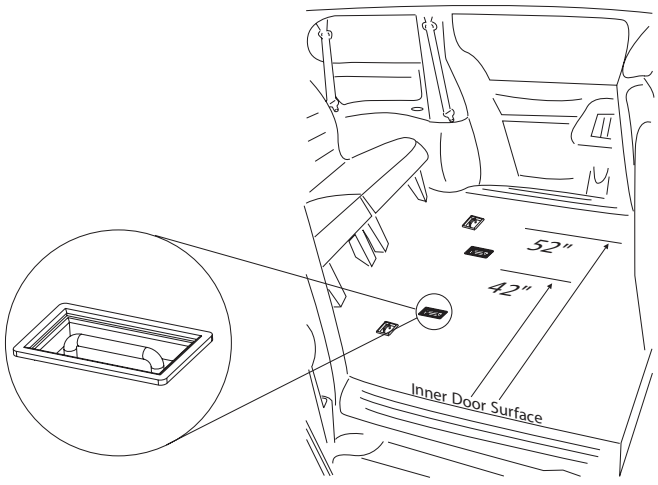

Figure 22-2

3. Front Leg Attachment

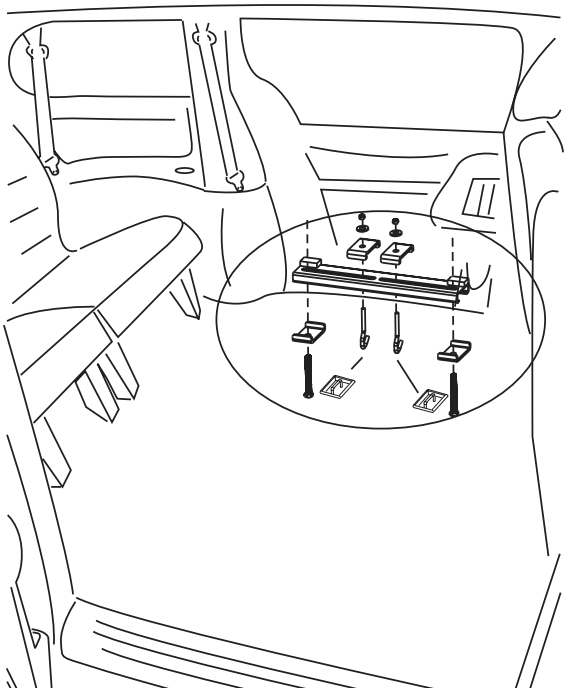

Figure 22-3

3A. If Seat Attachment Points ARE Available: See *Figure 22-3* for mounting diagram.

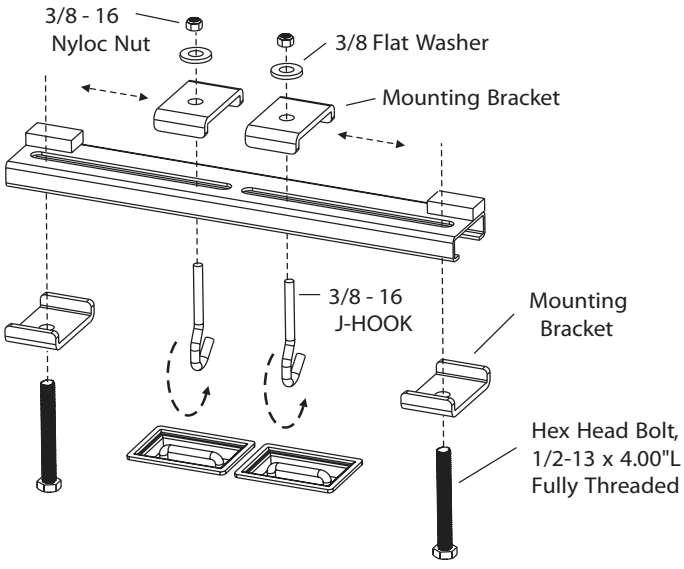

© 2014 Harmar Mobility, LLC • All Rights Reserved

3B. If Seat Attachment Points are NOT Available:
Look under vehicle in approximate area where Leg will need to be mounted. *[Figure 23-1]*

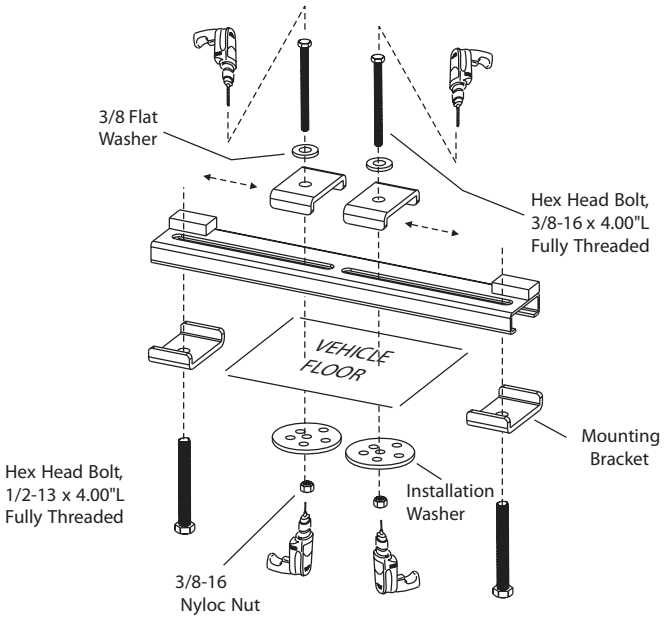

Figure 23-1

Look under vehicle in approximate area where leg will need to be mounted.

Drill a pilot hole first, up from under the vehicle to ensure nothing will be damaged.

Find hole from inside vehicle and drill 3/8" hole down through vehicle's floor.

CAUTION

USE EXTREME CAUTION

Avoid Gas Tank, Fuel / Brake / Electrical Lines

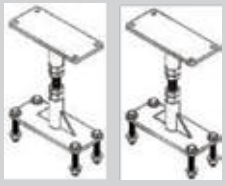

False floor support available when applicable for vehicles with Stow & Go seating. (2nd row seats must be removed)

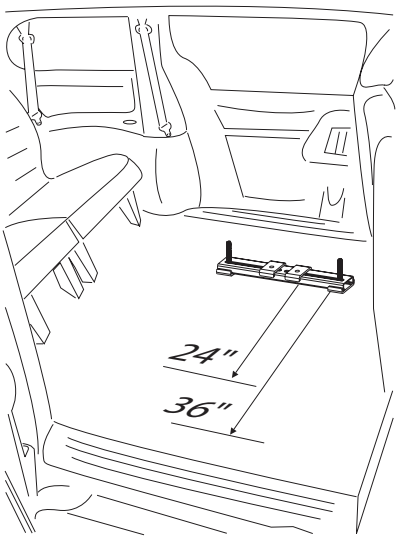

Figure 23-2

4. Installing the Rear Leg. The AL690's rear leg will be installed approximately 24" to 36" from the front leg. *[Figure 23-2]*

The uprights on both legs must be in line and square. Verify by measuring corner to corner. Distance should be identical. *[Figure 23-3]*

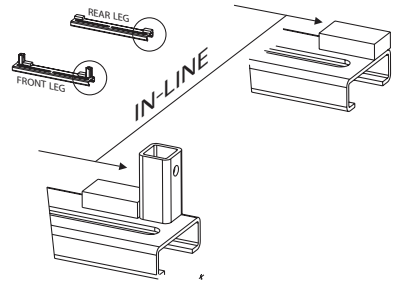

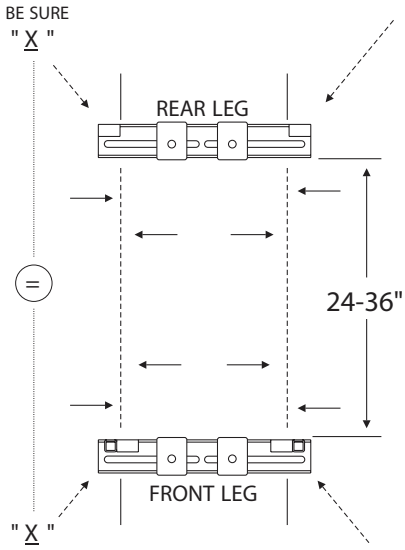

Figure 23-3

Rear Leg Attachment (con't)

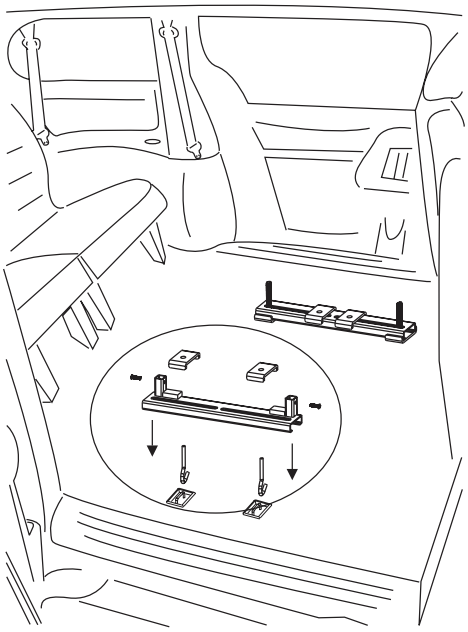

Figure 24-1

4A. If Seat Attachment Points ARE Available: See *Figure 24-1* for mounting diagram.

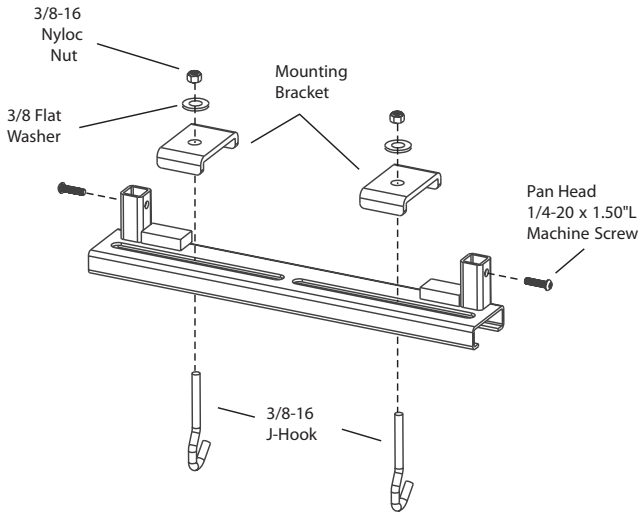

4B. If Seat Attachment Points are NOT Available:
Look under vehicle in approximate area where leg will need to be mounted. *[Figure 24-2]*

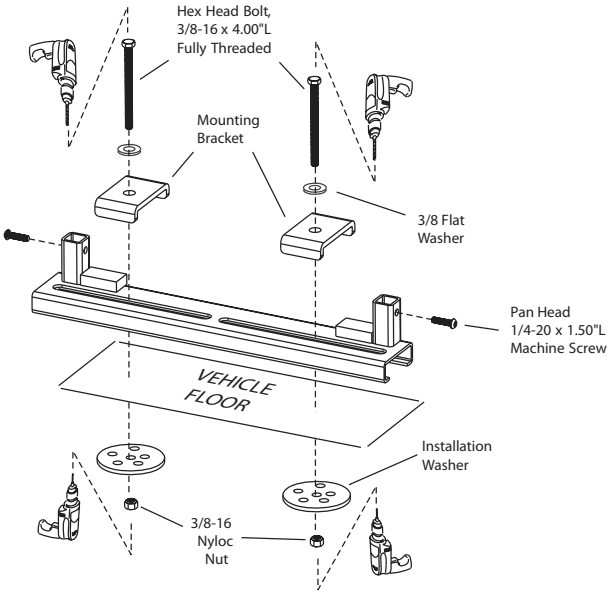

Figure 24-2

Drill a pilot hole first, up from under the vehicle to ensure nothing will be damaged.

Find hole from inside vehicle and drill 3/8" hole down through vehicle's floor.

CAUTION

USE EXTREME CAUTION

Avoid Gas Tank, Fuel / Brake / Electrical Lines

© 2014 Harmar Mobility, LLC • All Rights Reserved

5. Thread ½-13 nuts onto ½-13 4.00"L bolts installed previously.

Place ½" lock washer onto bolts.

Place mounting washers onto bolts

Using an assistant, place lift onto bolts through mounting flange on lift as shown. *[Figure 25-1]*

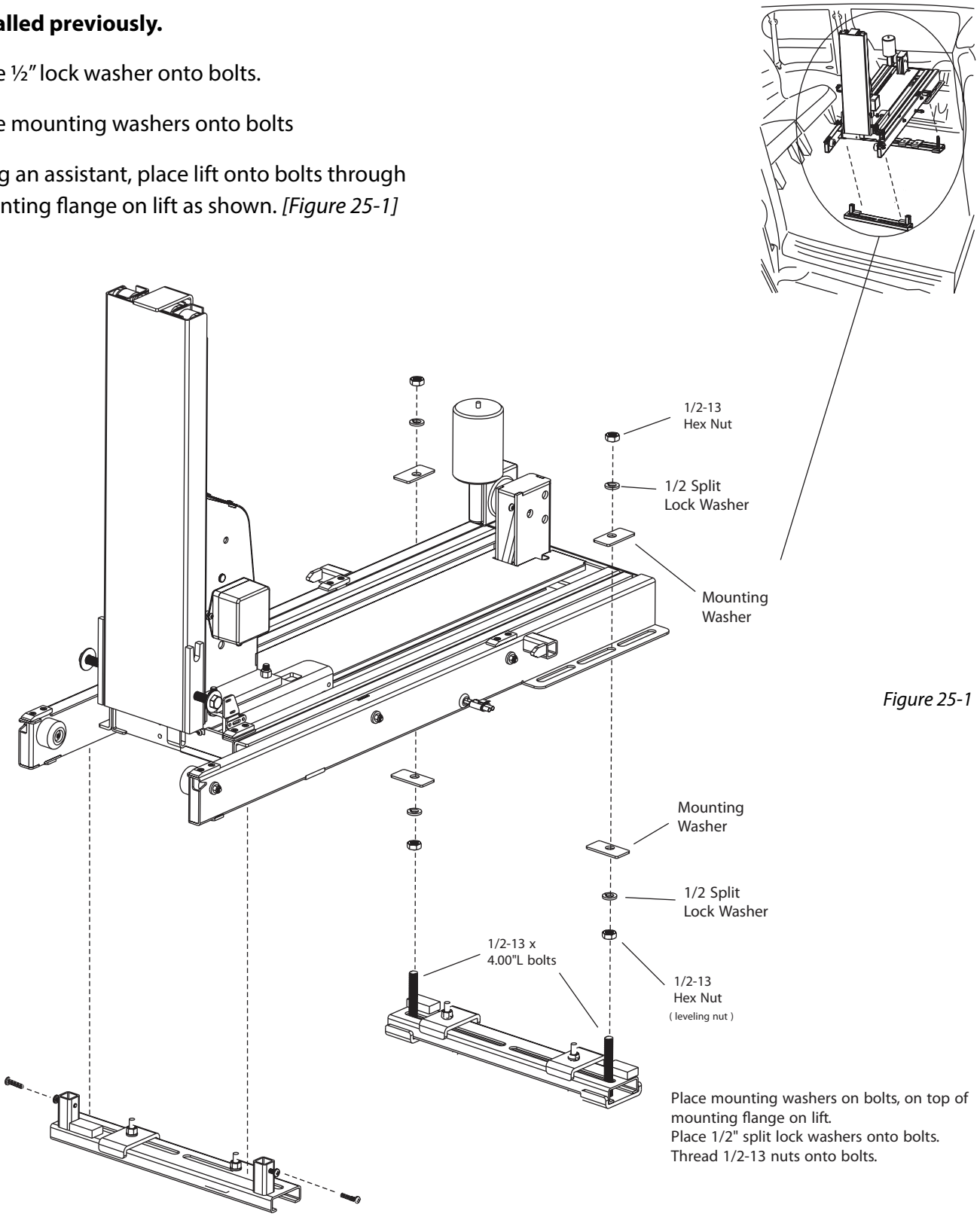

Figure 25-1

Place mounting washers on bolts, on top of mounting flange on lift.
Place 1/2" split lock washers onto bolts.
Thread 1/2-13 nuts onto bolts.

WARNING

If no assistant is available, follow instructions on page 11 to avoid injury.

6. Plug Hand Controller into lift. *[Figure 26-1]*

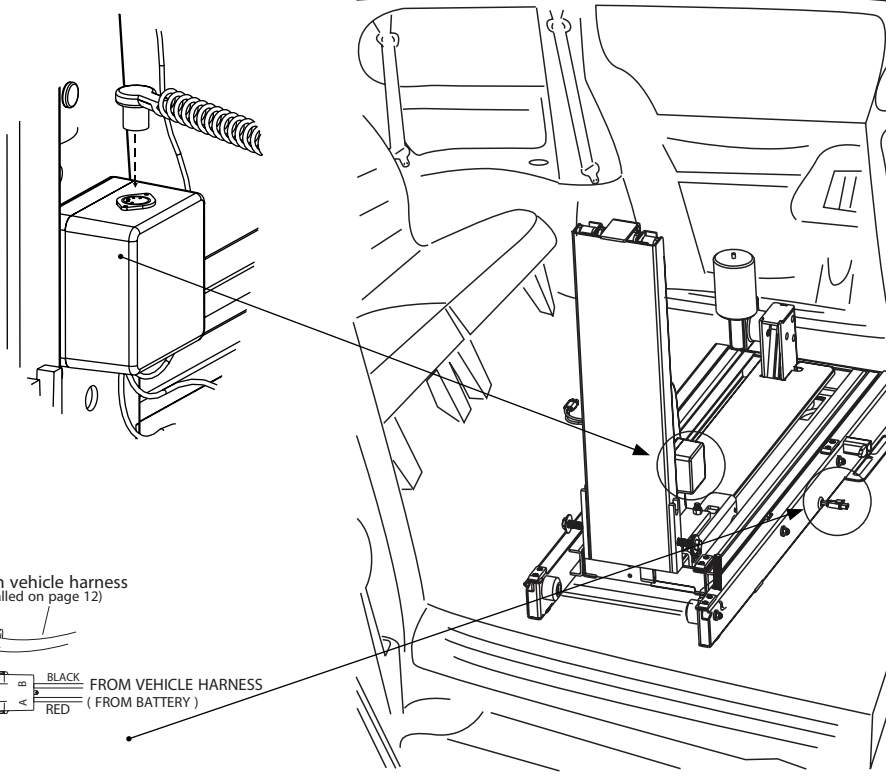

Figure 26-1

7. Connect to vehicle harness. *[Figure 26-2]*

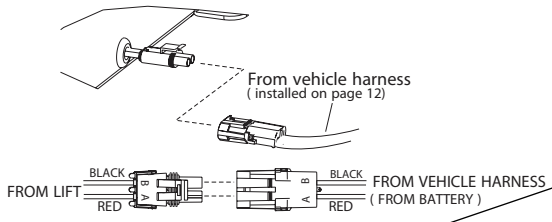

Figure 26-2

8. Press the DOWN button until the lift's tower has moved out of the vehicle. *[Figure 26-3]*

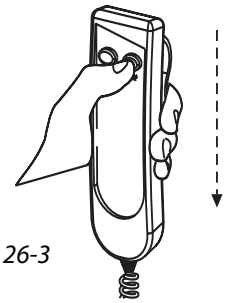

Figure 26-3

9. Attach platform by placing platform's upright pins into u-shaped bracket on tower. *[Figure 26-5]*

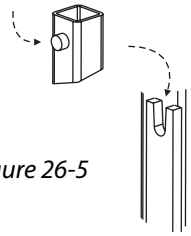

Figure 26-5

10. Install ½-13 x 1-3/4" Hex head Bolts and ½" flat washers into threaded holes as shown. *[Figure 26-6]* Test full motion of lift into and out of the vehicle. Be sure lift is level and that no obstructions interfere with the travel of the platform.

Tighten ALL fasteners from ALL steps.

The platform components may be re-assembled to match the opening of the vehicle's side door. *[Figure 26-4]*

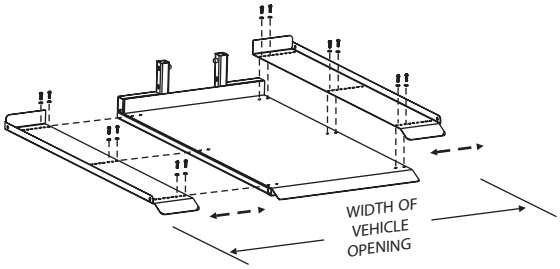

Figure 26-4

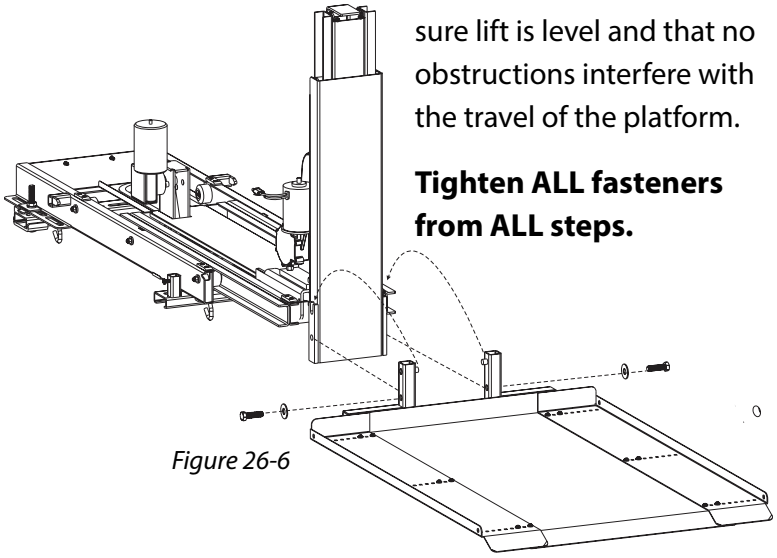

Figure 26-6

© 2014 Harmar Mobility, LLC • All Rights Reserved

The strap hooks included with lift can be attached by means of an Anchor Plate (for chairs or scooters with a center seat post) *[Figure 27-1]* or Anchor U-Bolts (for those without a center post.)

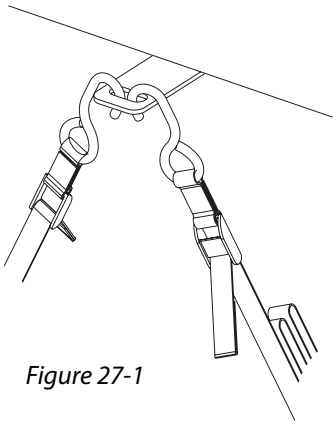

Figure 27-1

ANCHOR PLATE INSTALLATION

Use Anchor Plate for chairs or scooters with a center seat post.

The Anchor Plate is a flat plate with a slot in each end. This plate attaches to the bottom of the seat and works with any chair or scooter that has a center seat post.

1. Remove the chair seat.

2. Loosen the screws that attach the plate to the seat. Allow enough room to slide the anchor plate between the seat and the seat plate. *[Figure 27-2]*

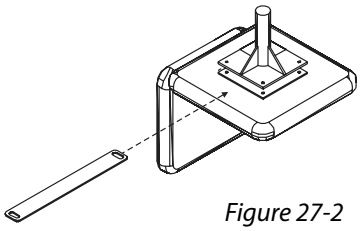

Figure 27-2

3. Make sure the anchor plate will extend about 1-1/2" on each side of the cushion. This provides space for the user to secure the strap hooks to the chair.

4. Attach the Anchor Plate in the center of the seat plate evenly, with the holes on each end. *[Figure 27-3]*

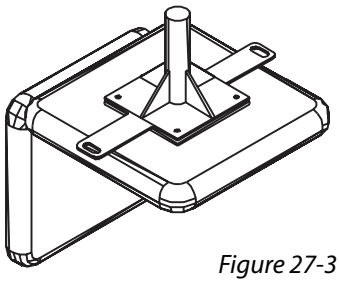

Figure 27-3

5. Re-tighten the screws that hold the seat plate to the bottom of the seat.

6. Replace the seat on the chair. *[Figure 27-4]*

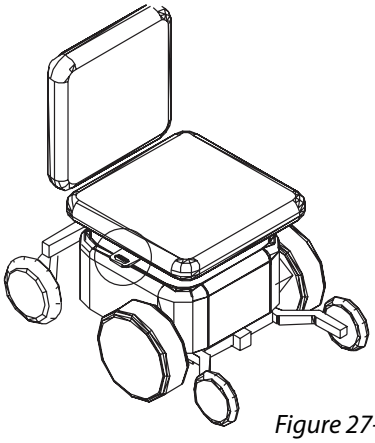

Figure 27-4

ANCHOR U-BOLTS

Use U-Bolts with Power Chairs or Scooter that do not have a center seat post.

For power chairs or scooters without a center seat post, the seat is normally attached to a tubular frame. Install the U-bolts, two on each side, to the frame as shown. *[Figure 28-1]*

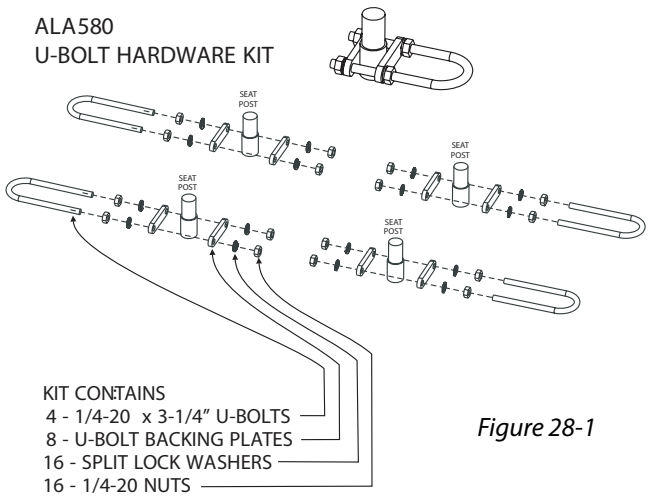

Figure 28-1

Ensure that the loop extends to the outside of the chair so the user can attach the strap hooks. *[Figure 28-2]*

U-bolt placement will differ among models and manufacturers. Place the U-bolts towards the center of the seat if possible. Due to different seat types, you may be forced to install the U-bolts more towards the front or rear of the seat, but we recommend attaching as close as possible to the center of the seat.

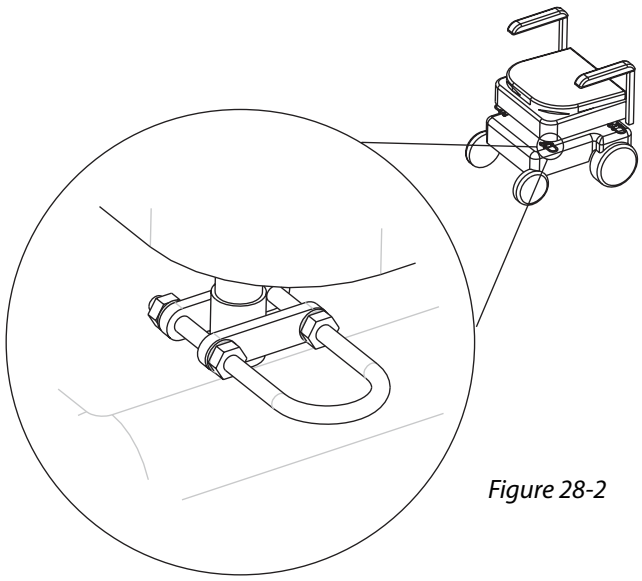

Figure 28-2

© 2014 Harmar Mobility, LLC • All Rights Reserved

DEALER/INSTALLER ONLY SECTION

The following procedures are reserved for the approved installer/dealer. They should not be attempted by anyone without proper knowledge of automotive electrical circuitry.

CAUTION

Be careful when troubleshooting with a test light or voltage meter. They may give false indications.

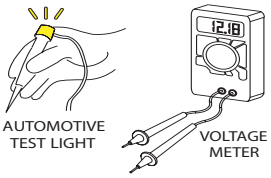

The instruments will detect voltage, but may not indicate a tear or poor connection in the wiring.

It is strongly recommended that you examine both voltage and current, or isolate sections of the lift wiring using process of elimination with a known good/fully charged 12V automotive battery or known good/fully charged power chair/ scooter battery.

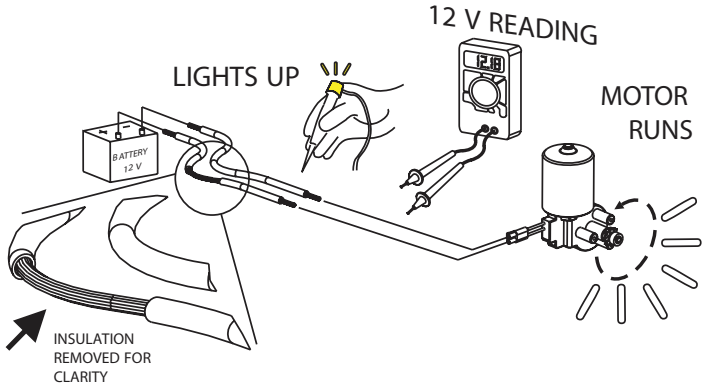

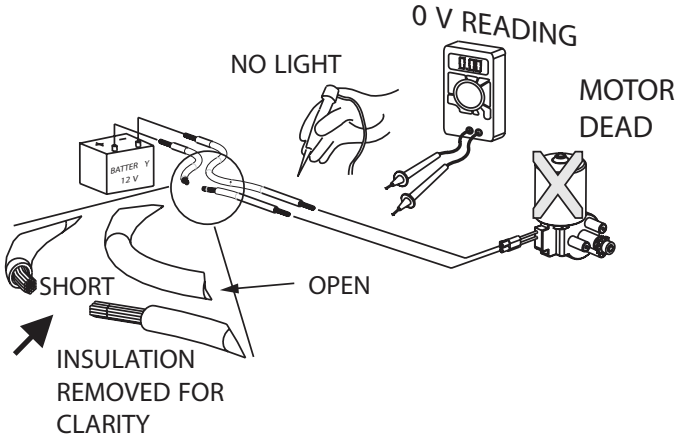

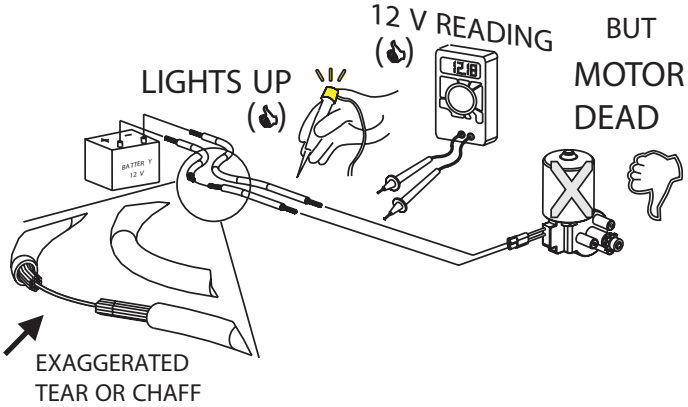

PROBLEM

Lift does not operate or lift operates slowly or intermittently

CAUSE

Bad electrical connection(s) / Circuit breaker

SOLUTION

Check / clean all connections that might be loose or dirty. This is the #1 cause of a poorly performing lift. The lifting motor requires quality electrical connections to operate at full capacity; any break in the wiring will slow down the motor and it will deteriorate prematurely.

Inspect the full length of the wire harness to ensure the insulation is not torn. The lift's vehicle power harness running through or under the vehicle is subject to road debris and rubbing against the vehicle's frame which can cause a short.

Verify the circuit breaker. The circuit breaker is located about 6" from the connections to the vehicle's battery. The breaker will self-reset if overloaded; however, verify (with Ohm meter or test light) that the breaker is functioning. Or replace it with a new/known-good circuit breaker and perform the following tests.

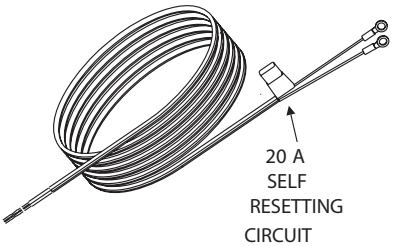

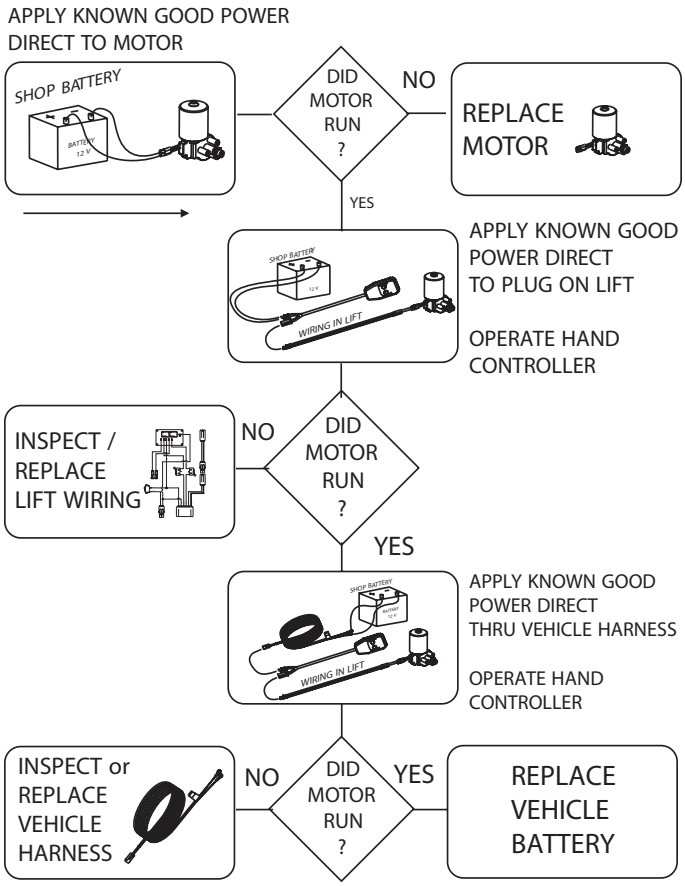

© 2014 Harmar Mobility, LLC • All Rights Reserved

PROBLEM

Scooter/ chair tips to the front or back while being lifted.

CAUSE

Platform is leaning to one side more than the other.

SOLUTION

Adjust position of chair or scooter on platform. In some cases, a scooter plate can be added to the platform to allow more offset.

PROBLEM

Lifting tower operates in reverse.

Cause

Button was held too long and unwound the lifting strap.

Like a yo-yo, the lifting strap wound in reverse.

SOLUTION

Press whichever button extends strap and continue to hold until strap returns to proper direction.

PROBLEM

Lift rattles while driving.

CAUSE

Platform is not 'docked.'

SOLUTION

Be sure to press 'IN' button until platform is fully engaged in its locking mechanism.

Check rear limit switch. Be sure lift is backing all the way into the vehicle.

AL600

PARTS LIST

ASSEMBLY PARTS			
ITEM	QTY	PART NO.	DESCRIPTION
1	1	100-2P03-CA	20" ANCHOR PLATE
2	1	260-3C01-AA	HYBRID TOWER AND BASE ASSY
3	1	270-ZC01-AA	PLATFORM ASSEMBLY - REAR DOOR APP
4	1	562-ZC01-CB	FOOTPLATE
5	1	903-2C13-AA	HARMAR STAGE STICKER
6	1	ALA284	HYBRID MOUNTING KIT - REAR DOOR PLATFORM LIFT
7	1	H21000	HAND CONTROL- 2 BUTTON
8	1	543-ZC01-CA	LEG - REAR DOOR APP
9	1	ALA21094	STICKER, CAUTION
10	1	ALA580	HARDWARE PACK - U-BOLT KIT
11	1	ALA680	HARDWARE PACK
12	4	ALA99995	STICKER, SERIAL NUMBER
13	1	H10096	PLATFORM STICKER, HARMAR
14	1	H600102	INSTRUCTION SHEET - MANUAL OVERRIDE
15	1	H600103	INSTRUCTION SHEET - 2 PC INSTALL
16	1	H600411	PATENT STICKER
17	1	H60066	CAUTION SHEET - PLATFORM CENTERING
18	2	HHCS-0_50-13--1_75-Z	HEX HEAD 1/2-13 x 1.75
19	2	WASH-0_50-1_37--0_12-RH-Z	WASHER 1/2 x 1.375 x 0.08

© 2014 Harmar Mobility, LLC • All Rights Reserved

AL600

ASSEMBLY

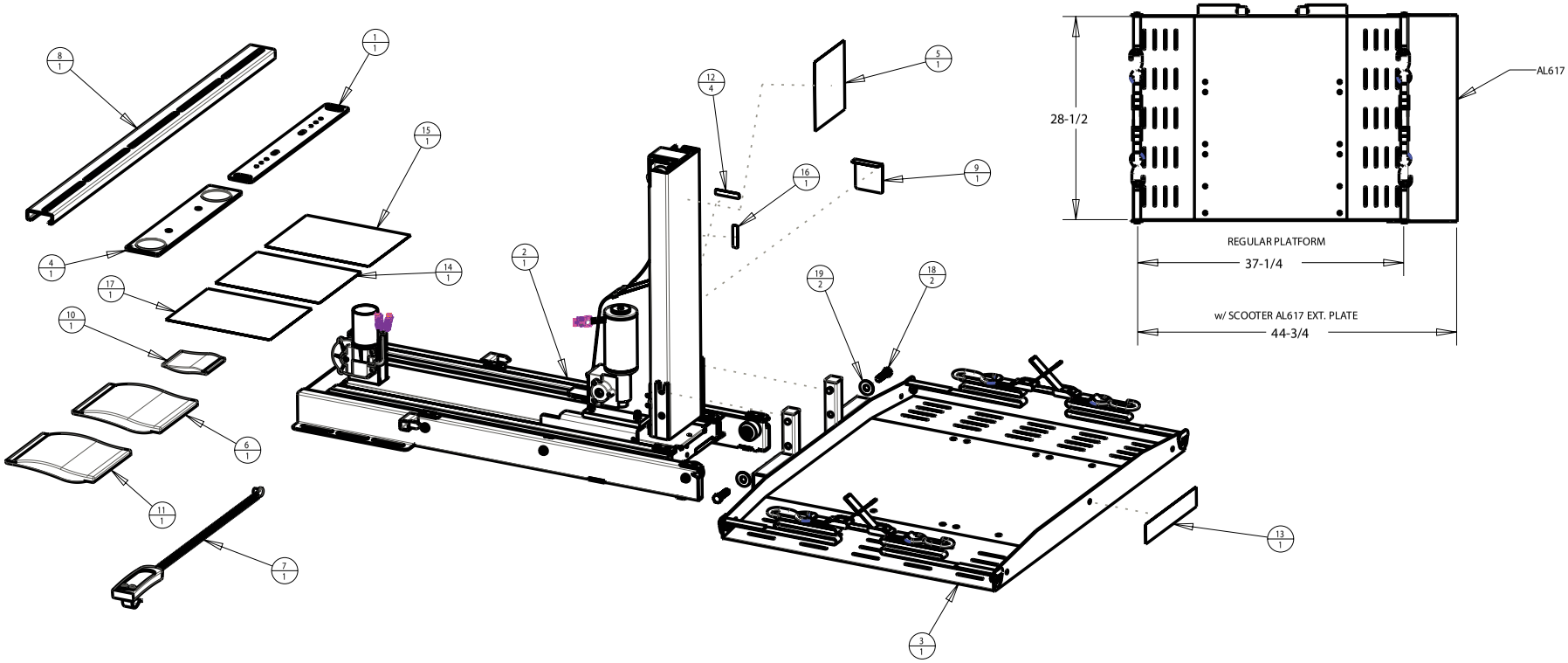

AL690

PARTS LIST

ASSEMBLY PARTS			
ITEM	QTY	PART NO.	DESCRIPTION
1	1	100-2P03-CA	20" ANCHOR PLATE
2	1	260-3C01-AA	HYBRID TOWER AND BASE ASSY
3	1	270-ZC02-AA	PLATFORM ASSEMBLY - SIDE DOOR APP
4	1	903-2C13-AA	HARMAR STAGE STICKER
5	1	ALA286	HYBRID MOUNTING KIT - SIDE DOOR PLATFORM LIFT
6	1	H21000	HAND CONTROL- 2 BUTTON
7	1	266-ZC02-CA	FRONT LEG - SIDE DOOR APP
8	1	267-ZC02-CA	REAR LEG - SIDE DOOR APP
9	1	ALA21094	STICKER, CAUTION
10	1	ALA580	HARDWARE PACK - U-BOLT KIT
11	1	ALA680	HARDWARE PACK
12	4	ALA99995	STICKER, SERIAL NUMBER
13	1	H600102	INSTRUCTION SHEET - MANUAL OVERRIDE
14	1	H600103	INSTRUCTION SHEET - 2 PC INSTALL
15	1	H600411	PATENT STICKER
16	1	H60066	CAUTION SHEET - PLATFORM CENTERING
17	2	HHCS-0_50-13--1_75-Z	HEX HEAD 1/2-13 x 1.75
18	2	WASH-0_50-1_37--0_12-RH-Z	WASHER 1/2 x 1.375 x 0.08

© 2014 Harmar Mobility, LLC • All Rights Reserved

AL690

ASSEMBLY

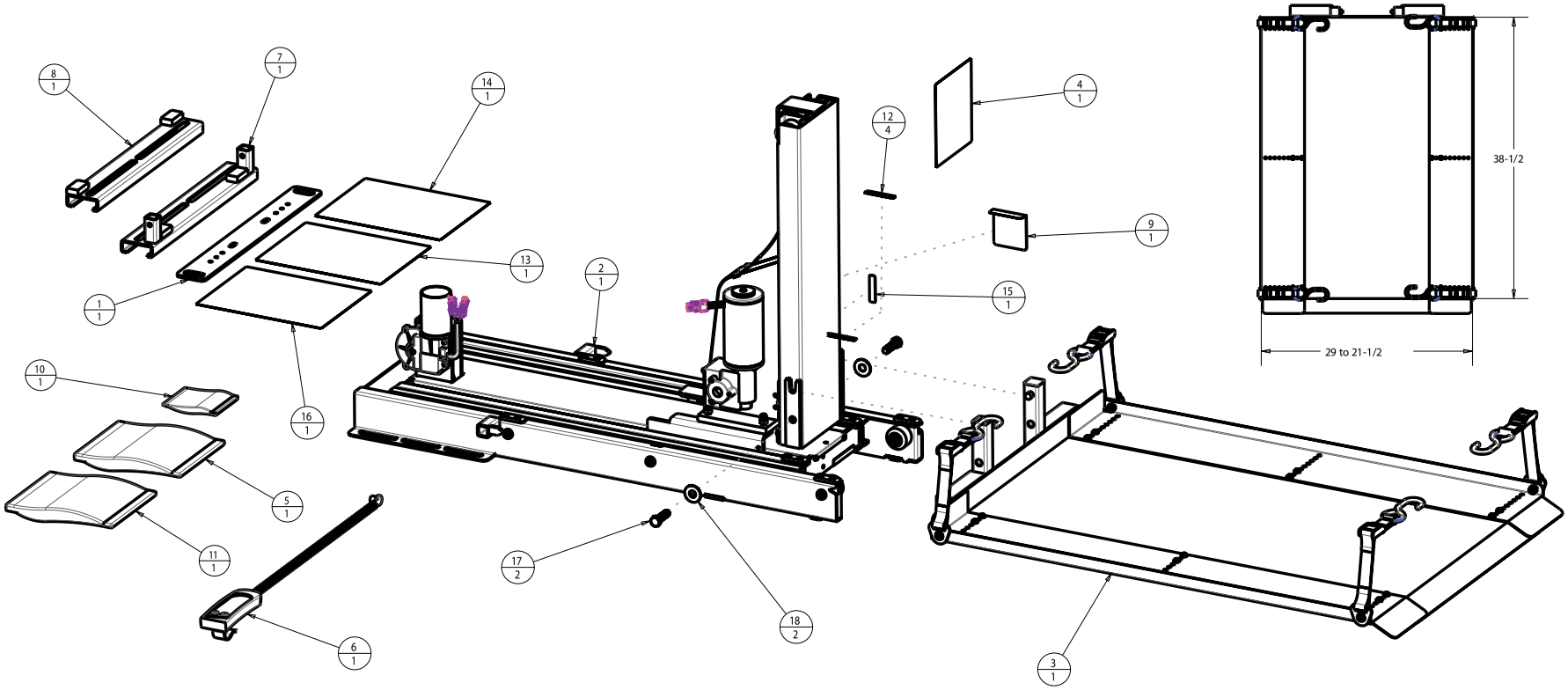

AL600/AL690

BASE STAGE ASSEMBLY PARTS LIST

BASE ASSEMBLY			
ITEM	QTY	PART NO.	DESCRIPTION
1	6	BHCS-0_25-20--2_50-SS	BUTTON HEAD 0.25-20 x 2.50
2	8	FHMS-10-24--0_50-NP-Z	FLAT HEAD 10-24 x 0.50 w/ PATCH
3	4	H600132	AL600 PLASTIC SHIM
4	6	H600141	AL600 BASE WHEEL
5	6	H600151	BASE WHEEL SPACER TUBE
6	1	211-ZC01-CA	HPL BASE
7	6	NUT-0_25-20-NYLOCK-Z	RUBBER NYLOCK NUT 1/4-20
8	2	RG-0_375-0_875-0_125	GROMMET 0.375 ID, 0.875 OD
9	6	WASH-0_25-0_62--0_04-RH-SS	WASHER 1/4 x 0.62 x 0.04

© 2014 Harmar Mobility, LLC • All Rights Reserved

AL600/AL690

BASE STAGE ASSEMBLY

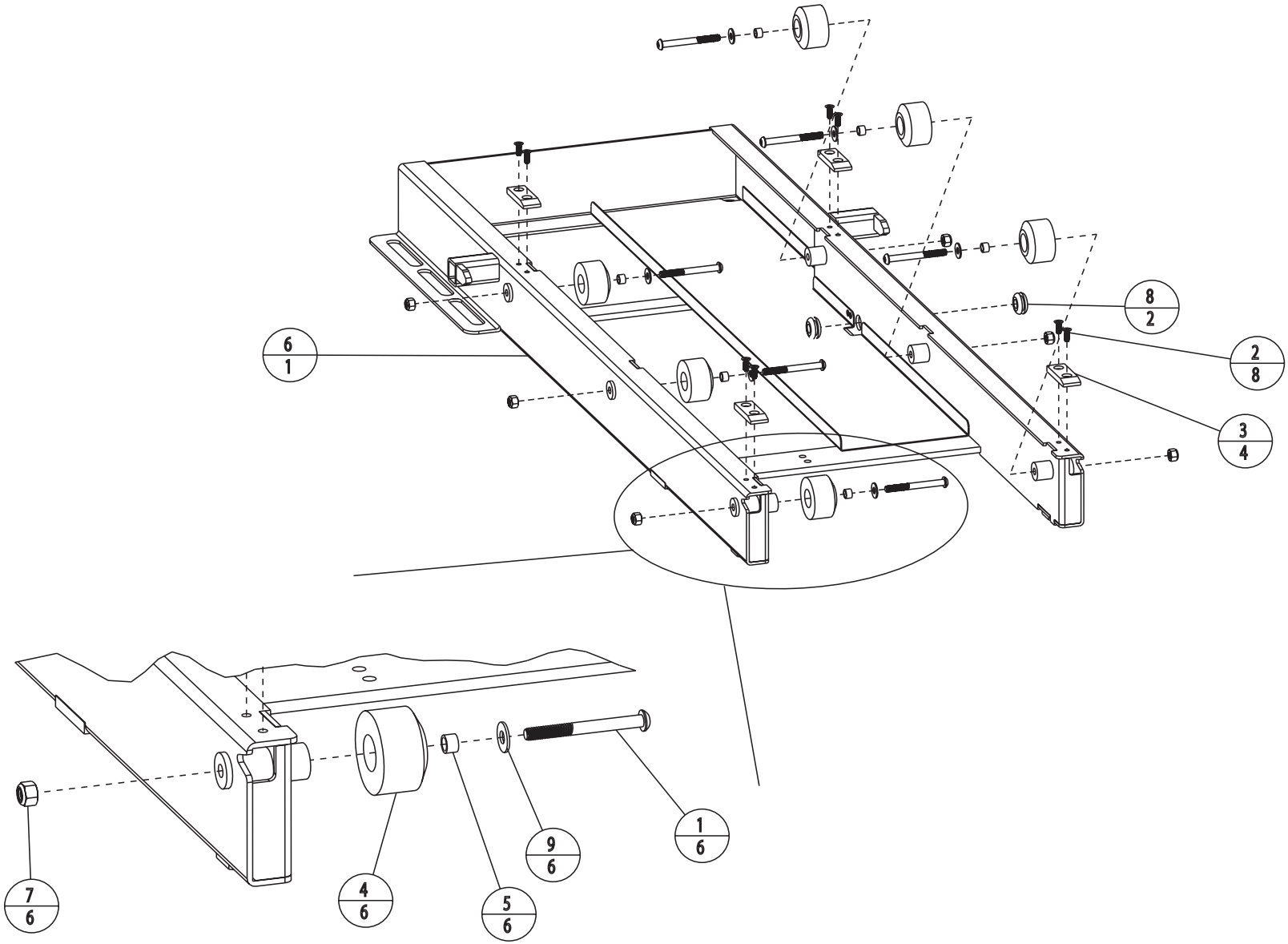

AL600/AL690

MIDDLE STAGE ASSEMBLY PARTS LIST

ASSEMBLY PARTS			
ITEM	QTY	PART NO.	DESCRIPTION
1	1	221-ZC01-CA	HPL MIDDLE STAGE
2	1	700-1D02-AB	MOTOR, ANKARSRUM, KSV 4030-822
3	4	ALA21411	FLANGE BUSHING BRZ 3/8 x 1/2 x 1/2
4	1	ALA60022	H600802 VERTICAL CHAIN
5	3	BHCS-M6-1_00-16-SS	BUTTON HEAD CAP SCREW< M6-16mm, 18-8SS
6	4	FHMS-10-24--0_50-NP-Z	FLAT HEAD 10-24 x 0.50 w/ PATCH
7	2	H600132	AL600 PLASTIC SHIM
8	1	H600135	AL600 DOUBLE SPROCKET
9	1	H600150	SPROCKET 35B8
10	2	NUT-0_31-18-NYLOCK-Z	NYLOCK NUT: 5/16-18
11	2	SHSB-0_37--2_00-Z	SHOULDER BOLT: 3/8 X 2.00
12	3	SPCR-0_25-0_50--0_18-N	SPACER: ID-.25, OD=.50, L=.188
13	3	WASH-0_25-0_50--0_06-SL-Z	SPLIT LOCK WASHER 1/4

© 2014 Harmar Mobility, LLC - All Rights Reserved

AL600/AL690

MIDDLE STAGE ASSEMBLY

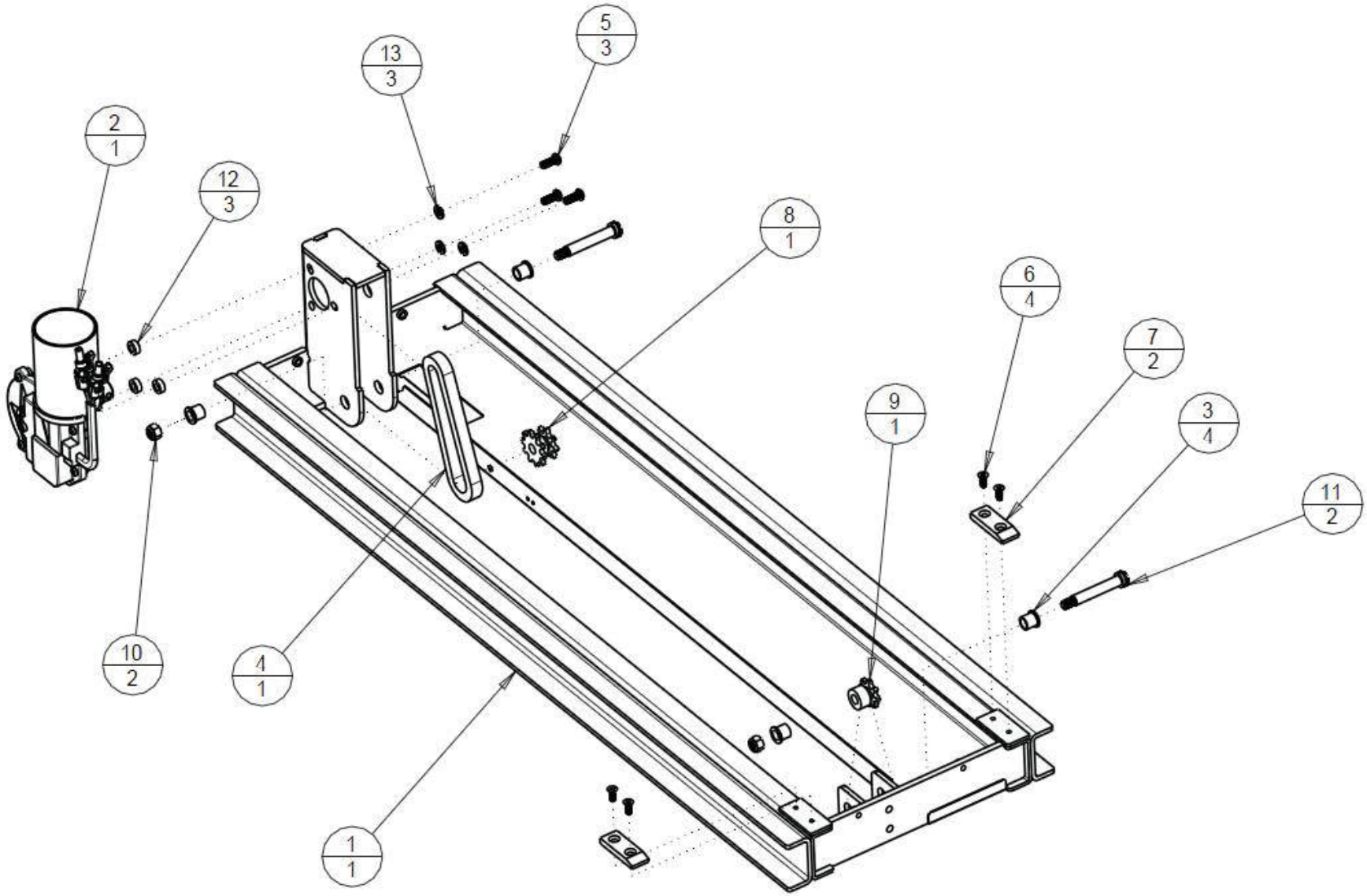

AL600/AL690

HORIZONTAL ASSEMBLY PARTS LIST

ASSEMBLY PARTS			
ITEM	QTY	PART NO.	DESCRIPTION
1	1	218-3C01-AA	HYBRID STOP ROD AND MICRO SWITCH ASSEMBLY
2	1	220-ZC01-AB	MIDDLE STAGE ASSEMBLY
3	1	317-3C01-AA	PIONEER WIRING HARNESS
4	1	201-3C01-CA	PASSENGERSIDE WHEELS
5	1	202-ZC01-CA	DRIVERSIDE WHEELS
6	1	210-ZC01-AA	BASE STAGE ASSEMBLY
7	1	531-ZC01-CA	COVER MID STAGE
8	1	542-ZC01-CA	BASE CHAIN BRACKET
9	1	563-ZC01-CA	MIDDLE STAGE LIMITING BRACKET
10	2	ALA60020	HORIZONTAL CHAIN
11	2	ALA62099	CHAIN TENSIONER BOLT
12	2	BHCS-0_25-20--0_50	BUTTON HEAD 1/4-20 x 0.50
13	2	BHCS-0_25-20--0_75-SS	BUTTON HEAD 1/4-20 x 0.75
14	6	BHCS-4-40--0_31-SS	BUTTON HEAD 4-40 x 0.3125
15	2	BHCS-4-40-0_75-SS	BUTTON HEAD CAP SCREW, 4-40 x 3/4"L, ZP
16	4	BHCS-10-24--0_50-SS	BUTTON HEAD 10-24 x 0.50
17	2	BHCS-10-32--0_37	BHCS 10-32 x 0.375
18	2	C36010423	CLIP, "P" 7/16" (HEYCO 3377 OR EQ.)
19	4	H600158	REAR ROLLER
20	2	HHCS-025-20--0_75-NP-Z	HEX HEAD CAP SCREW, 1/4-20 x 0.75"L, NYLOC PATCH, ZINC
21	2	NUT-0_25-20-NYLOCK-Z	NYLOCK NUT 1/4-20
22	2	NUT-0_31-18-NYLOCK-Z	NYLOCK NUT: 5/16-18
23	6	NUT-4-40-KEPS-Z	4-40 NUT WITH EXTRUDED FINGER WASHER

© 2014 Harmar Mobility, LLC • All Rights Reserved

AL600/AL690

HORIZONTAL ASSEMBLY

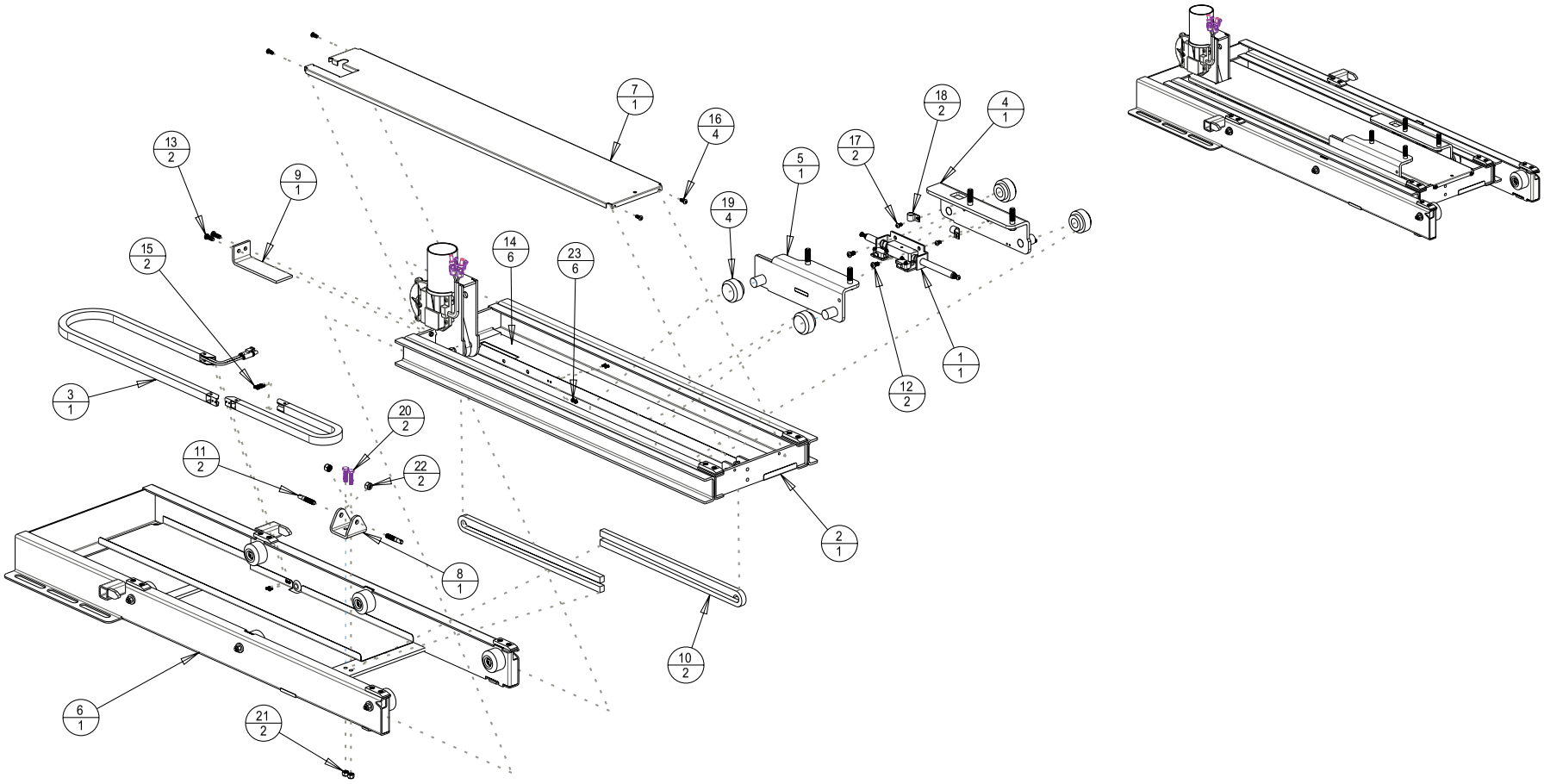

AL600/AL690

STOP ROD AND MICRO SWITCH ASSEMBLY PARTS LIST

ASSEMBLY PARTS			
ITEM	QTY	PART NO.	DESCRIPTION
1	2	303-ZC04-AC	LIMIT SWITCH
2	1	406-ZC04-AG	MICRO SWITCH - ACTIVATION BLOCK
3	1	407-3C01-AA	HYBRID MICRO SWITCH STOP ROD
4	1	535-ZC04-PG	MICRO SWITCH ROD SUPPORT - REAR
5	2	536-ZC04-AB	SPRING 1.25" X .66" OD
6	1	537-ZC04-CB	LIMIT SWITCH SPACER
7	4	BHCS-4-40--0_75-SS	4-40 X .75" BUTTON HEAD CAP SCREW
8	2	BHCS-10-24--0_75-SS	BUTTON HEAD CAP SCREW, 10-24 x 3/4"L, 18-8SS
9	4	NUT-4-40-KEPS-Z	4-40 NUT WITH EXTRUDED FINGER WASHER
10	2	NUT-10-24-HEX-SS	HEX THIN NUT, 10-24, 18-8SS
11	1	PIN-0_13-0_75-RP-Z	ROLL PIN DIA 0.125 X 0.75 STEEL, ZINC PLATE

© 2014 Harmar Mobility, LLC • All Rights Reserved

AL600/AL690

STOP ROD AND MICRO SWITCH ASSEMBLY

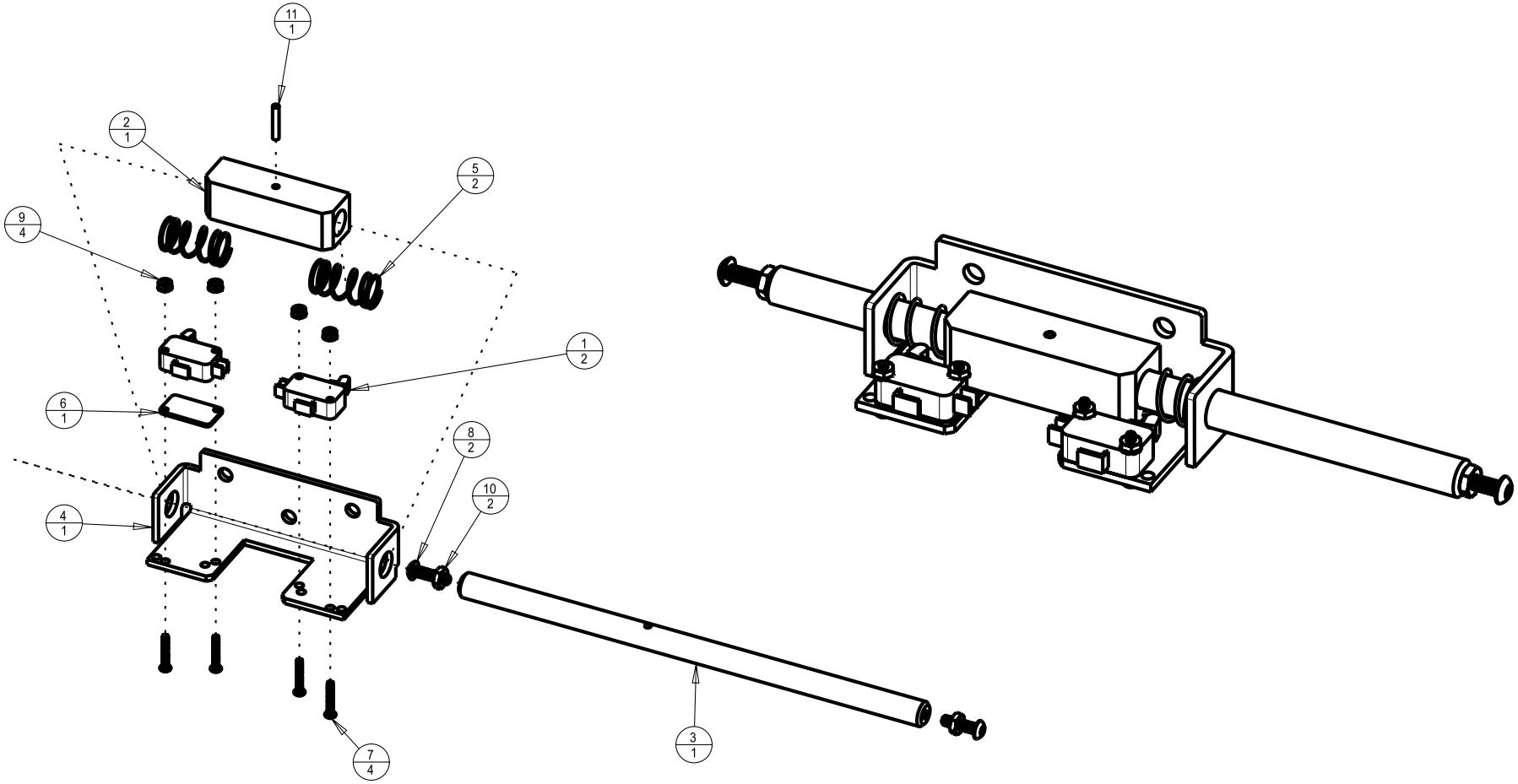

AL600/AL690

DRIVE TOWER ASSEMBLY PARTS LIST

ASSEMBLY PARTS			
ITEM	QTY	PART NO.	DESCRIPTION
1	1	241-3C01-CA	HPL UPPER CAR ASSEMBLY
2	1	214-3C01-PA	SPOOL, LIFTING, HYBRID, 30 TOOTH
3	1	541-ZC01-CA	HYBRID CHAIN COVER
4	1	700-3C01-AA	HYBRID LIFTING MOTOR, EUCLID
5	1	ALA21020	SPOOL CHAIN
6	1	ALA21055	STRAP TAB
7	2	ALA21410	FLANGE BUSHING BRZ 3/8 x 1/2 x 3/8
8	1	ALA6701	STRAP ROLLER
9	1	ALA67999	LIFTING STRAP
10	3	BHCS-0_25-28--0_50-SS	BUTTON HEAD 1/4-28 x 0.50
11	1	BHCS-10-32--0_37	BHCS 10-32 x 0.375
12	6	PHTS-8--0_50-Z	PAN HEAD TAP #8 x 0.50
13	1	PIN-0_12--1_50-CO-SS	COTTER PIN
14	1	PIN-0_31--2_50-CL-Z	CLEVIS PIN: 5/16 X 2.50 [2.28 USABLE]
15	1	PIN-0_37--2_50-CL-Z	CLEVIS PIN: 3/8 x 2.50 [2.34 USABLE]
16	3	WASH-0_25-0_50--0_06-SL-Z	SPLIT LOCK WASHER 1/4

© 2014 Harmar Mobility, LLC • All Rights Reserved

AL600/AL690

DRIVE TOWER ASSEMBLY

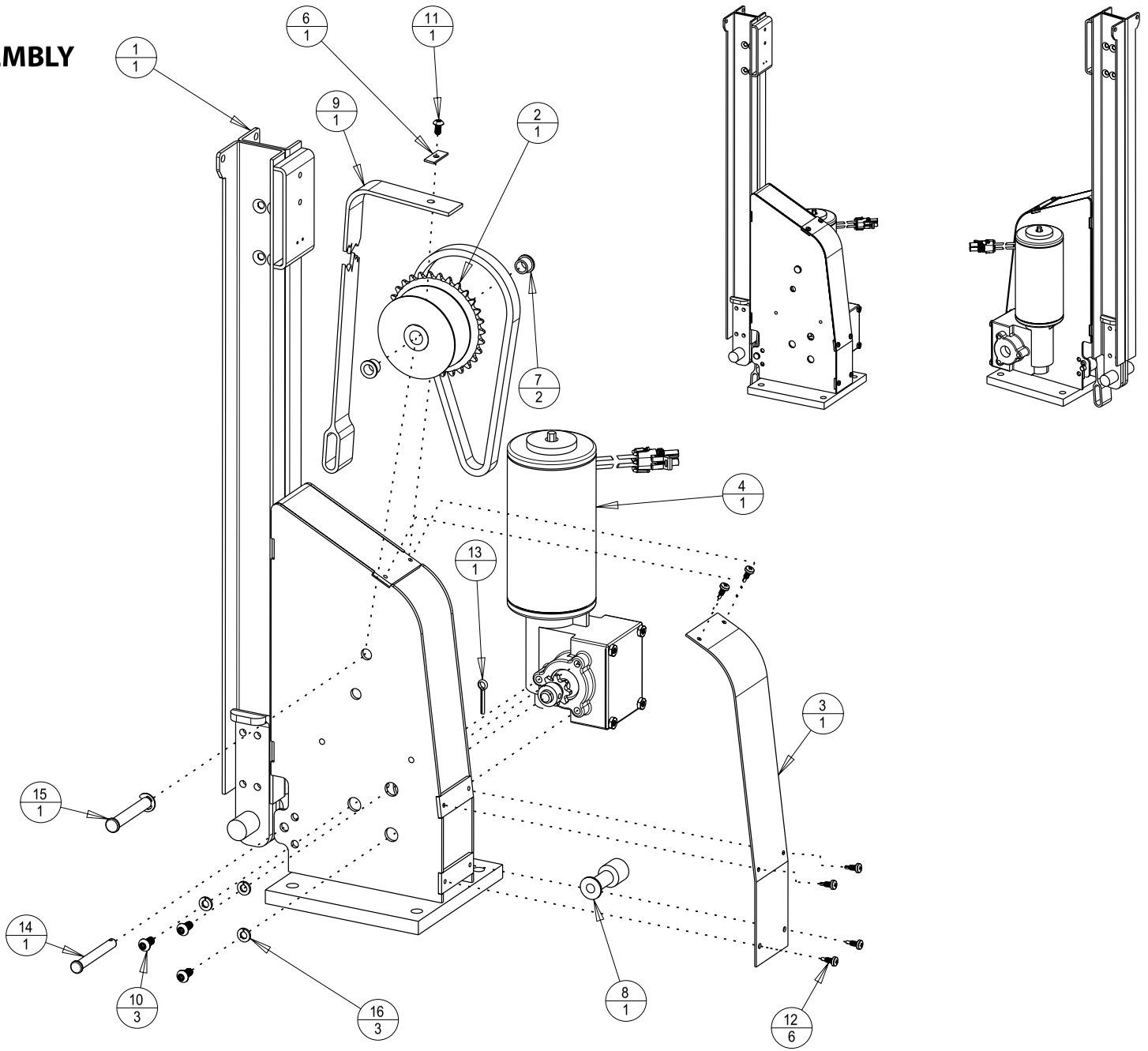

AL600/AL690

TOWER ASSEMBLY PARTS LIST

ASSEMBLY PARTS			
ITEM	QTY	PART NO.	DESCRIPTION
1	1	240-3C01-AA	HYBRID INNER TOWER VERTICAL ASSEMBLY
2	1	251-ZC01-CA	HPL MIDDLE CAR ASSEMBLY
3	1	253-ZC01-CA	LOWER CAR ASSEMBLY
4	1	256-ZC01-CA	HYBRID AXLE ASSY LEFT
5	1	257-ZC01-CA	HYBRID AXLE ASSY RIGHT
6	1	502-ZC01-CA	HYBRID TOP LIMIT PLATE
7	1	503-ZC01-CA	HYBRID TOP LIMIT ADJUSTMENT
8	1	579-ZC01-CA	HYBRID STRAP MOUNTING PLATE
9	1	ALA50006C	U-BOLT BACKING PLATE
10	8	ALA60061	ROLLER
11	1	ALA6789	BACKING PLATE RUBBER, 1" BLACK, ADHESIVE
12	2	BHCS-0_25-20--0_50	BUTTON HEAD 1/4-20 x 0.50
13	8	FHMS-0_25-20--0_75-NP-Z	FLAT HEAD w/PATCH 1/4-20 X 0.75
14	2	HHCS-0_25-20--0_75-Z	HEX HEAD 1/4-20 x 0.75
15	2	NUT-0_25-20-NYLOCK-Z	NYLOCK NUT 1/4-20
16	8	NUT-025-20-HEX-Z	NUT, HEX, 1/4-20, ZINC PLATE
17	2	RHMS-0_25-20--0_25-Z	ROUND HEAD 1/4-20 X 0.25
18	2	SHCS-0_25-20--0_25-Z	SOCKET HEAD 1/4-20 x 0.25
19	2	SHSB-0_25--0_25-SS	SHOULDER BOLT 1/4 SHAFT X 0.25
20	2	WASH-0_25-0_50--0_06-SL-Z	SPLIT LOCK WASHER 1/4

© 2014 Harmar Mobility, LLC • All Rights Reserved

AL600/AL690
TOWER ASSEMBLY

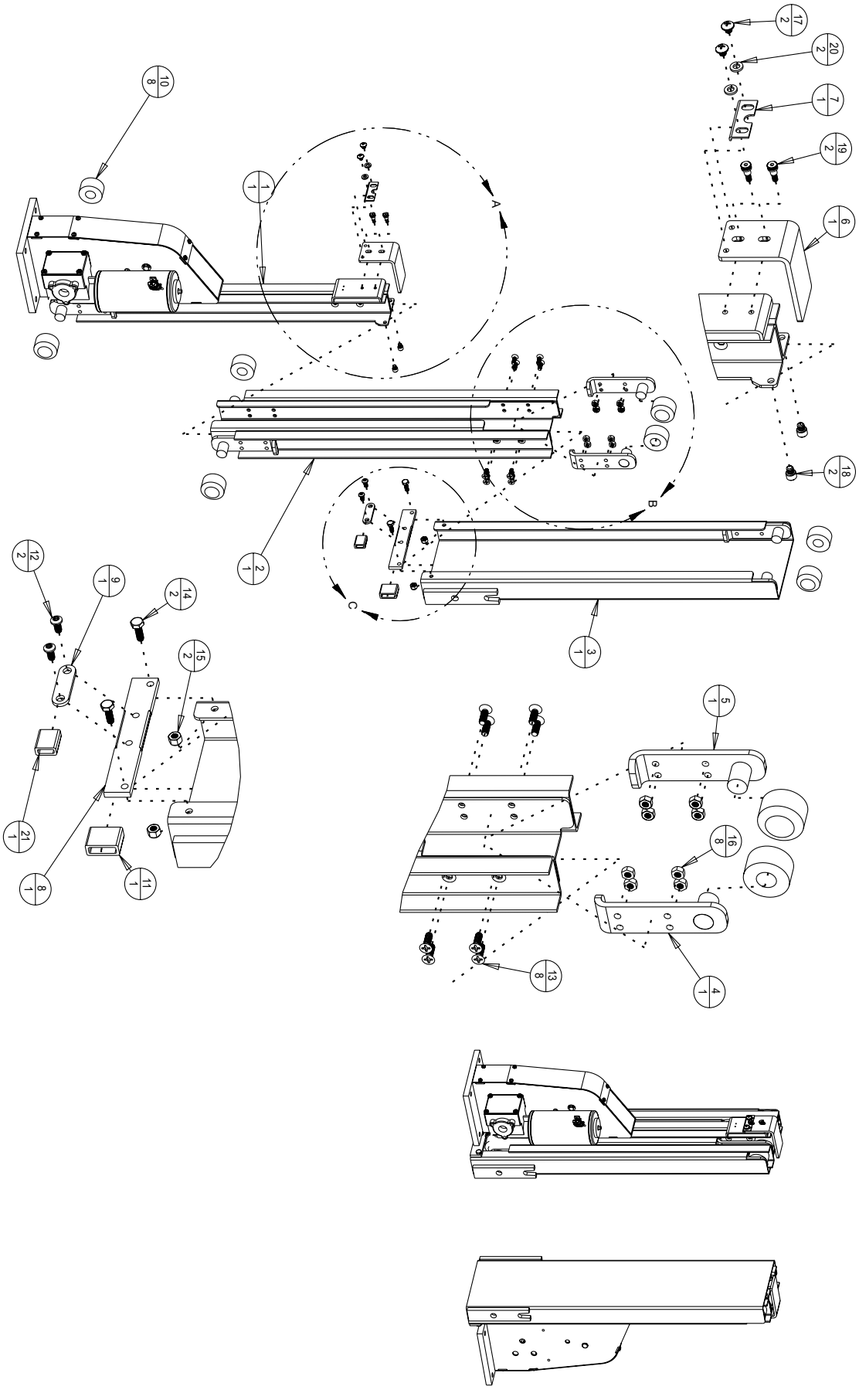

AL600

PLATFORM ASSEMBLY PARTS LIST

ASSEMBLY PARTS			
ITEM	QTY	PART NO.	DESCRIPTION
1	1	271-ZC01-CA	HPL PLATFORM
2	2	400-ZC01-AA	INSERT, SQUARE, 1.25, BLACK PLASTIC
3	4	ALA69073	PIONEER STRAP ASSEMBLY
4	4	BHCS-0_37-16--0_75-SS	BUTTON HEAD 3/8-16 x 0.75
5	4	NUT-0_37-16-NYLOCK-Z	NYLOCK 3/8-16

© 2014 Harmar Mobility, LLC • All Rights Reserved

AL600

PLATFORM ASSEMBLY

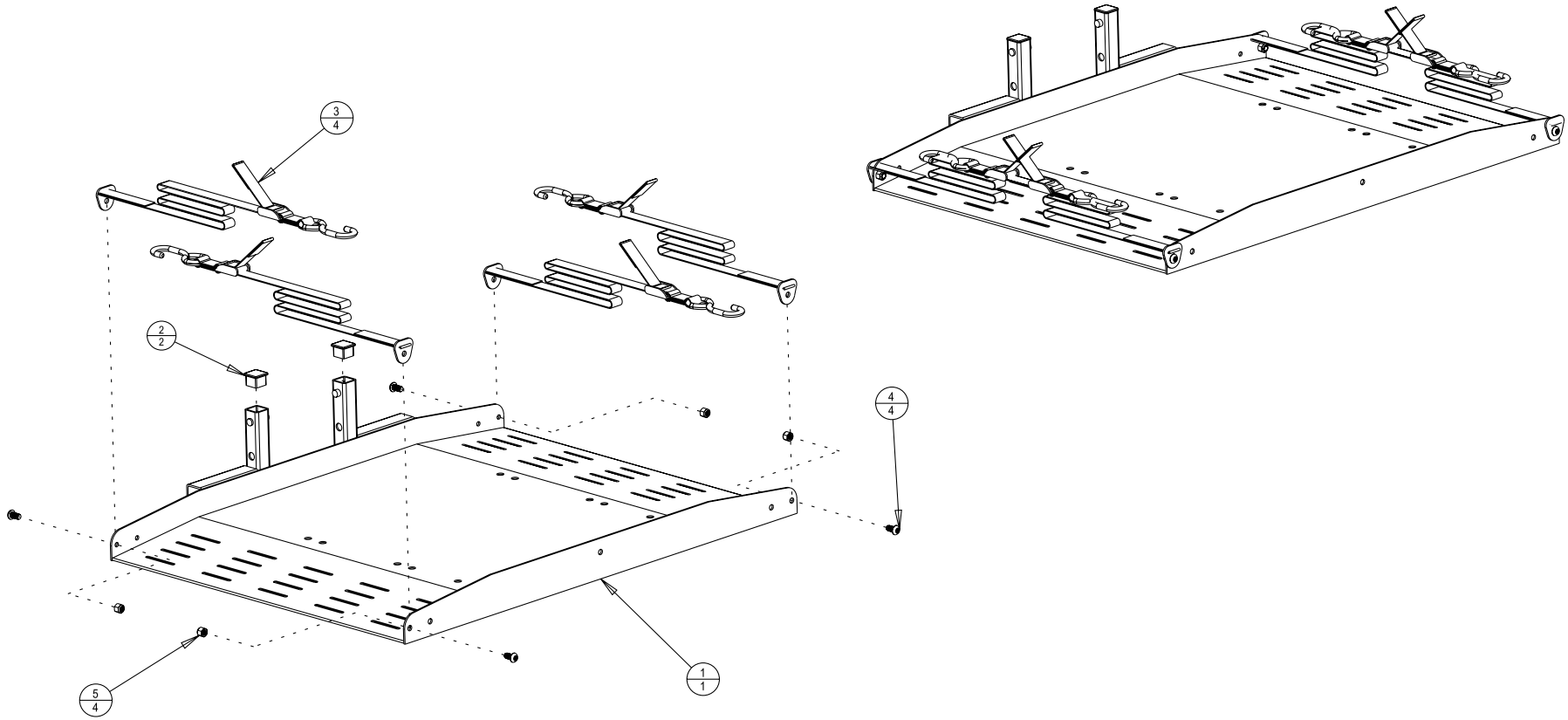

AL690

PLATFORM ASSEMBLY PARTS LIST

ASSEMBLY PARTS			
ITEM	QTY	PART NO.	DESCRIPTION
1	1	279-ZC02-CA	INNER PLATFORM, HYBRID SIDE DOOR
2	2	400-ZC01-AA	INSERT, SQUARE, 1.25, BLACK PLASTIC
3	1	578-ZC02-CA	SIDE DOOR ADJ PLATFORM END LEFT
4	1	579-ZC02-CA	SIDE DOOR ADJ PLATFORM END RIGHT
5	4	ALA69073	PIONEER STRAP ASSEMBLY
6	12	BHCS-0_25-20--0_75-SS	BUTTON HEAD 1/4-20 x 0.75
7	4	BHCS-0_37-16--0_75-SS	BUTTON HEAD 3/8-16 x 0.75
8	4	NUT-0_37-16-NYLOCK-Z	NYLOCK 3/8-16
9	12	WASH-0_25-0_50--0_06-SL-Z	SPLIT LOCK WASHER 1/4

© 2014 Harmar Mobility, LLC • All Rights Reserved

AL690

PLATFORM ASSEMBLY

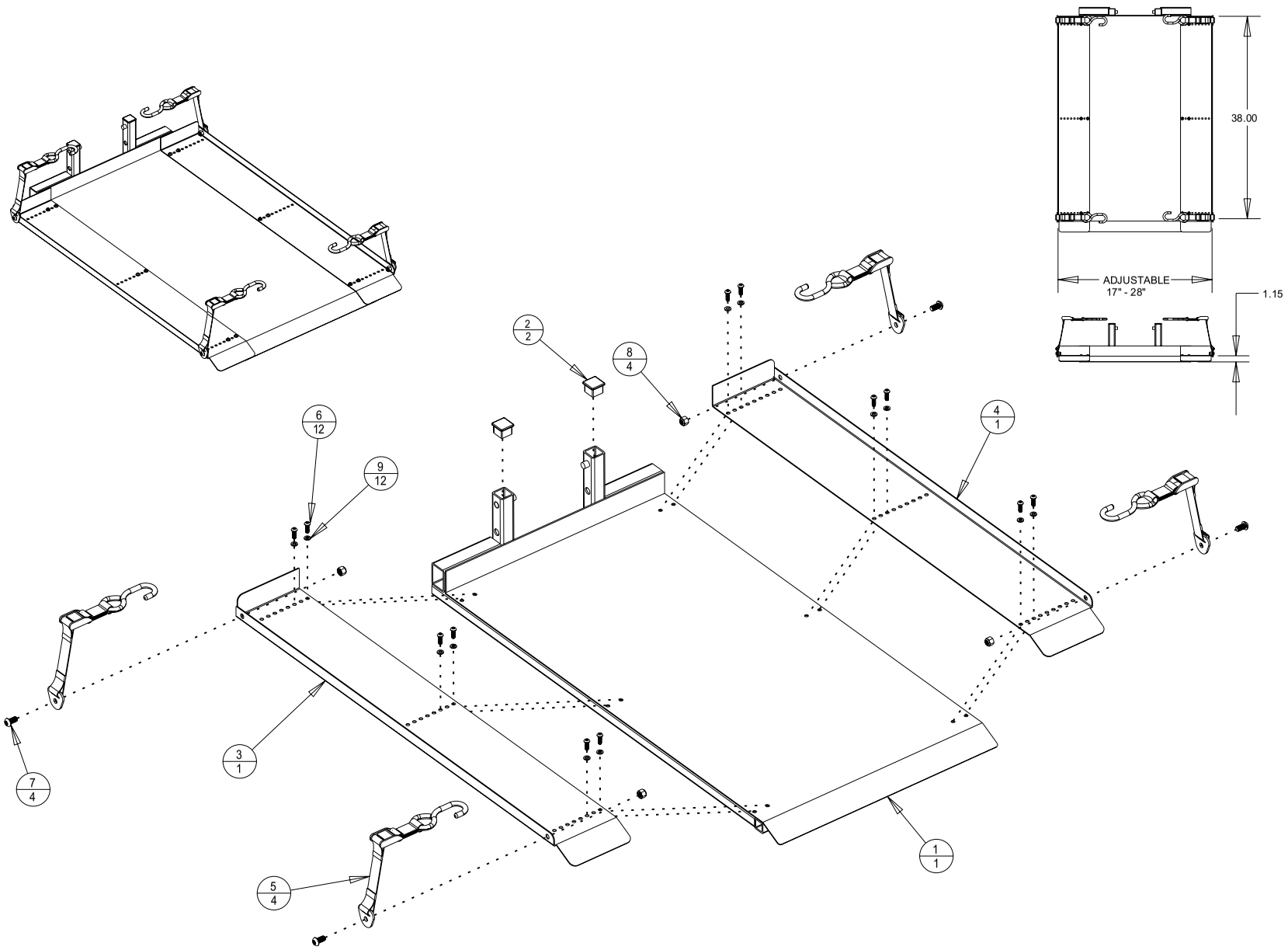

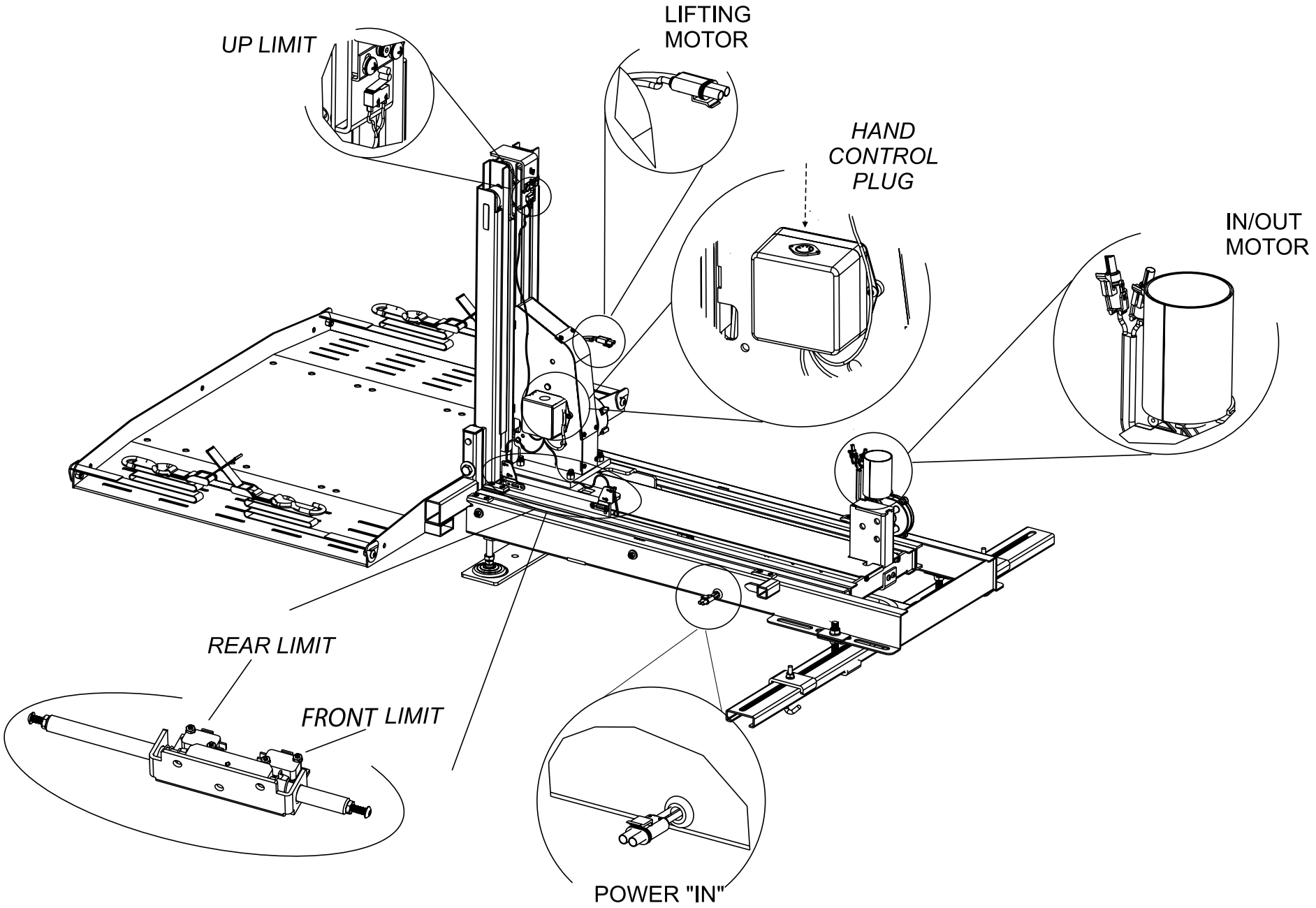

© 2014 Harmar Mobility, LLC • All Rights Reserved

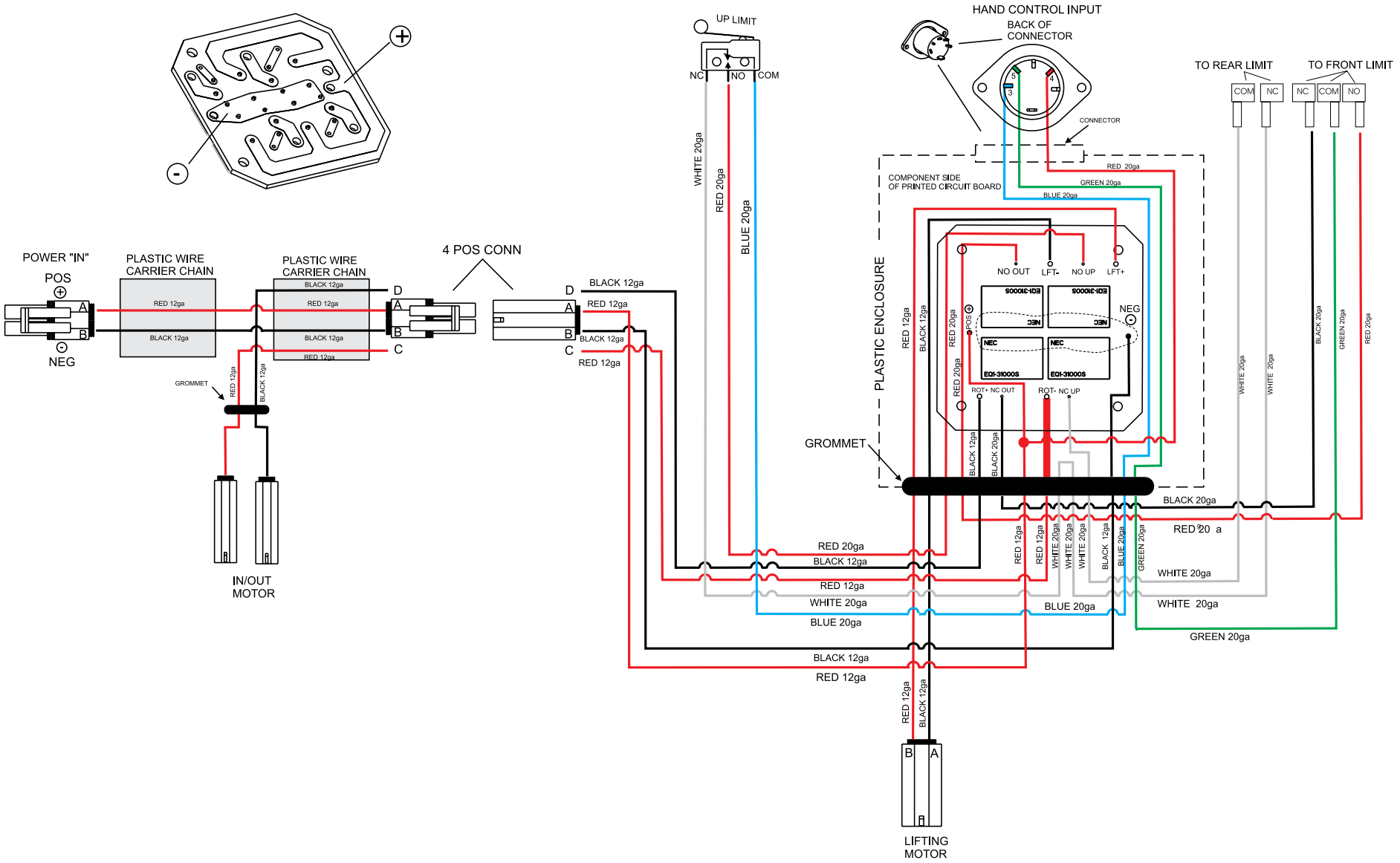
+
-
POWER "IN"
POS
NEG
A
B
PLASTIC WIRE CARRIER CHAIN
RED 12ga
BLACK 12ga
PLASTIC WIRE CARRIER CHAIN
BLACK 12ga
RED 12ga
BLACK 12ga
RED 12ga
4 POS CONN
D
A
B
C
GROMMET
RED 12ga
BLACK 12ga
IN/OUT MOTOR
UP LIMIT
NC
NO
COM
WHITE 20ga
RED 20ga
BLUE 20ga
HAND CONTROL INPUT
BACK OF CONNECTOR
CONNECTOR
TO REAR LIMIT
TO FRONT LIMIT
COM
NC
NC
COM
NO
COMPONENT SIDE OF PRINTED CIRCUIT BOARD
PLASTIC ENCLOSURE
RED 20ga
GREEN 20ga
BLUE 20ga
NO OUT
LFT-
NO UP
LFT+
NEG
POS
NEC
EO1-31000S
ROT+ NC OUT
ROT- NC UP
GROMMET
RED 12ga
BLACK 12ga
RED 20ga
BLACK 20ga
BLACK 20ga
RED 20ga
WHITE 20ga
WHITE 20ga
GREEN 20ga
RED 20ga
RED 12ga
BLACK 12ga
RED 12ga
WHITE 20ga
BLUE 20ga
BLACK 12ga
RED 12ga
RED 12ga
BLACK 12ga
B
A
LIFTING MOTOR