Invacare® ***Solara***® ***3G/Spree 3G*** Wheelchair

User Manual

EN

This manual MUST be given to the user of the product.

BEFORE using this product, read this manual and save for future reference.

INVACARE®

Yes, you can.®

© 2016 Invacare Corporation. All rights reserved. Republication, duplication or modification in whole or in part is prohibited without prior written permission from Invacare. Trademarks are identified by ™ and ® . All trademarks are owned by or licensed to Invacare Corporation or its subsidiaries unless otherwise noted.
WD-40 is a registered trademark of the WD-40 Company.
Teflon is a registered trademark of E.I. Du Pont De Nemours and Company.
Loctite is a registered trademark of Loctite Corporation.

1 GENERAL 8

Symbols 8
Indication for Use 9
Limited Warranty 9

2 OVERVIEW 10

Label Locations 10
Component Identification 12
Specifications 13

3 SAFETY 16

General Guidelines 16
Wear and Tear Items 18
Safety/Handling of Wheelchairs 28
Transferring To and From Other Seats 35

4 OPERATION 36

Installing/Removing Footrests 36
Raising/Lowering the Elevating Legrest 37
Installing Impact Guards/Calf Strap/H-Calf Strap 38
Installing/Removing Dual Point Armrests (Fixed And Adjustable Height) 38
Removing/Installing and Using Flipback Armrests 40
Installing/Removing T-Arms 42
Using Locking Cantilever Arms 43
Using Non-Locking Cantilever Arms 43
Using the Wheel Locks 44
Operating Hublocks 48

Installing the Anti-Tippers 50
Using the Adjustable Angle Stroller Handles 51
Folding/Unfolding the Back Assembly 51
Recliner Operation 52
Engaging Tilt-In-Space 54
Installing/Removing Rear Wheels - Quick-Release 56

5 TRANSPORT READY OPTION 57

About Transport Ready Packages 58
Compliance Information 58
Specifications 58
Securing the Wheelchair to the Vehicle 59
Securing the Occupant 63

6 ADJUSTMENT 68

Adjusting the Height of the Adjustable Height Armrests 68
Adjusting T-Arm Height 69
Adjusting the Anti-Tippers 70
Adjusting The Quick-Release Axle 71

7 TRANSPORTING 72

Transporting 72

8 SAFETY INSPECTION/MAINTENANCE 73

Safety Inspection Checklists 73
Troubleshooting - Mechanical 76
Maintenance Safety Precautions 76
Suggested Maintenance Procedures 76

Cleaning Instructions 79

9 SERVICE 80

Set up Inspection Checklists 81

10 FRONT RIGGINGS 82

Adjusting Footrest Height 82
Installing Adjustable Angle Flip-Up Footplate Hinge 84
Adjusting Adjustable Angle Flip-Up Footplates 85
Raising/Lowering the Elevating Legrest 86
Adjusting Footplate Height and Calfpad Height/Depth 87
Composite/Articulating Footplate Heel Loop Replacement 88
Replacing Bolt On Sector Block 89
Replacing Clamp on Sector Block 89

11 ARMS 90

Replacing Conventional Armrest Pads 90
Adjusting the T-Arm 91
Adjusting T-Arm Sockets. 93
Adjusting T-Arm Transfer Assists And/or Side Guards 94
Installing Locking Cantilever Arms. 95
Adjusting Locking Cantilever Arm Height. 95
Installing/Adjusting Non-Locking Cantilever Arms 97
Arm Pad Replacement for Cantilever Arms 99

12 BACK/SEAT 100

Adjusting the Height of the Adjustable Height Back Canes 100
Adjusting the Back Angle 101

Installing/Removing Non-Adjustable Stroller Handles 103
Adjusting the Adjustable Angle Stroller Handles 104
Installing/Replacing Seat Positioning Straps 104
Installing/Replacing Chest Positioning Straps 106
Installing and Removing a Seating System 106

13 TILT 107

Adjusting Tilt-In-Space Trigger Release Cables 107
Adjusting Hublock Cables 110
Positioning Tilt Locking Collars 111

14 VENT TRAY 114

Adjusting the Vent Tray Height 114

15 WHEELS/FORKS 116

Installing/Removing Rear Wheels 116
Seat-To-Floor Height Adjustment 117
Adjusting Forks 117

16 WHEEL LOCKS/ANTI-TIPPERS 118

Wheel Lock Adjustment 118

17 RECLINER BACK OPTION 121

Replacing Back/Headrest Upholstery. 121

18 CONTRACTURE FOOT ASSEMBLY 123

Adjusting the Angle of the Contracture Assembly 123
Adjusting the Angle of the Bilateral Contracture Footplate 124
Depth Adjustment 126

Contracture Footplate Height Adjustment 127
Contracture Assembly Width Adjustment 128
19 ANNEX A - RESNA TEST DATA **131**
Disclosure 131

1 General

1.1 Symbols

Warnings

Signal words are used in this manual and apply to hazards or unsafe practices which could result in personal injury or property damage. See the information below for definitions of the signal words.

DANGER

Danger indicates an imminently hazardous situation which, if not avoided, will result in death or serious injury.

WARNING

Warning indicates a potentially hazardous situation which, if not avoided, could result in death or serious injury.

CAUTION

Caution indicates a potentially hazardous situation which, if not avoided, may result in property damage or minor injury or both.

IMPORTANT

Indicates a hazardous situation that could result in damage to property if it is not avoided.

Gives useful tips, recommendations and information for efficient, trouble-free use.

1.2 Indication for Use

The Invacare Spree 3G is indicated for providing mobility to adolescents age 12 and up limited to a sitting position.

The Invacare Solara 3G is indicated for providing mobility to adults limited to a sitting position.

1.3 Limited Warranty

PLEASE NOTE: THE WARRANTY BELOW HAS BEEN DRAFTED TO COMPLY WITH FEDERAL LAW APPLICABLE TO PRODUCTS MANUFACTURED AFTER JULY 4, 1975.

This warranty is extended only to the original purchaser/user of our products.

This warranty gives you specific legal rights and you may also have other legal rights which vary from state to state.

Invacare warrants its product, except for the seat cushion (which is not warranted), to be free from defects in materials and workmanship for a period of one year from the date of purchase when purchased new and unused from Invacare or an authorized provider. The side frames and crossmembers are under a limited lifetime warranty from the date of purchase when purchased new and unused from Invacare or an authorized provider for the original purchaser/user. If within such warranty period this product shall be proven to be defective, such product shall be repaired or replaced, at Invacare's option, with refurbished or new parts. This warranty does not include any labor or shipping charges incurred in replacement part installation or repair of this product. Product repairs shall not extend this warranty - coverage for repaired product shall end when this limited warranty terminates. Invacare's sole obligation and your exclusive remedy under this warranty shall be limited to such repair and/or replacement.

For warranty service, please contact the dealer from whom you purchased your Invacare product. In the event you do not receive satisfactory warranty service, please write directly to Invacare at the address on the back cover, provide dealer's name, address, date of purchase, indicate nature of the defect and, if the product is serialized, indicate the serial number. Do not return products to our factory without our prior consent.

LIMITATIONS AND EXCLUSIONS: THE FOREGOING WARRANTY SHALL NOT APPLY TO SERIAL NUMBERED PRODUCTS IF THE SERIAL NUMBER HAS BEEN REMOVED OR DEFACED, PRODUCTS SUBJECTED TO NEGLIGENCE, ACCIDENT, IMPROPER OPERATION, MAINTENANCE OR STORAGE, PRODUCTS MODIFIED WITHOUT INVACARE'S EXPRESS WRITTEN CONSENT INCLUDING, BUT NOT LIMITED TO, MODIFICATION THROUGH THE USE OF UNAUTHORIZED PARTS OR ATTACHMENTS; PRODUCTS DAMAGED BY REASON OF REPAIRS MADE TO ANY COMPONENT WITHOUT THE SPECIFIC CONSENT OF INVACARE, OR TO A PRODUCT DAMAGED BY CIRCUMSTANCES BEYOND INVACARE'S CONTROL, AND SUCH EVALUATION WILL BE SOLELY DETERMINED BY INVACARE. THE WARRANTY SHALL NOT APPLY TO PROBLEMS ARISING FROM NORMAL WEAR OR FAILURE TO ADHERE TO THESE INSTRUCTIONS.

THE FOREGOING EXPRESS WARRANTY IS EXCLUSIVE AND IN LIEU OF ANY OTHER WARRANTIES WHATSOEVER, WHETHER EXPRESS OR IMPLIED, INCLUDING THE IMPLIED WARRANTIES OF MERCHANTABILITY AND FITNESS FOR A PARTICULAR PURPOSE, AND THE SOLE REMEDY FOR VIOLATIONS OF ANY WARRANTY WHATSOEVER, SHALL BE LIMITED TO REPAIR OR REPLACEMENT OF THE DEFECTIVE PRODUCT PURSUANT TO THE TERMS CONTAINED HEREIN. THE APPLICATION OF ANY IMPLIED WARRANTY WHATSOEVER SHALL NOT EXTEND BEYOND THE DURATION OF THE EXPRESS WARRANTY PROVIDED HEREIN. THE MANUFACTURER SHALL NOT BE LIABLE FOR ANY CONSEQUENTIAL OR INCIDENTAL DAMAGES WHATSOEVER.

THIS WARRANTY SHALL BE EXTENDED TO COMPLY WITH STATE/PROVINCIAL LAWS AND REQUIREMENTS.

2 Overview

2.1 Label Locations

Wheelchairs without Transport Ready Option

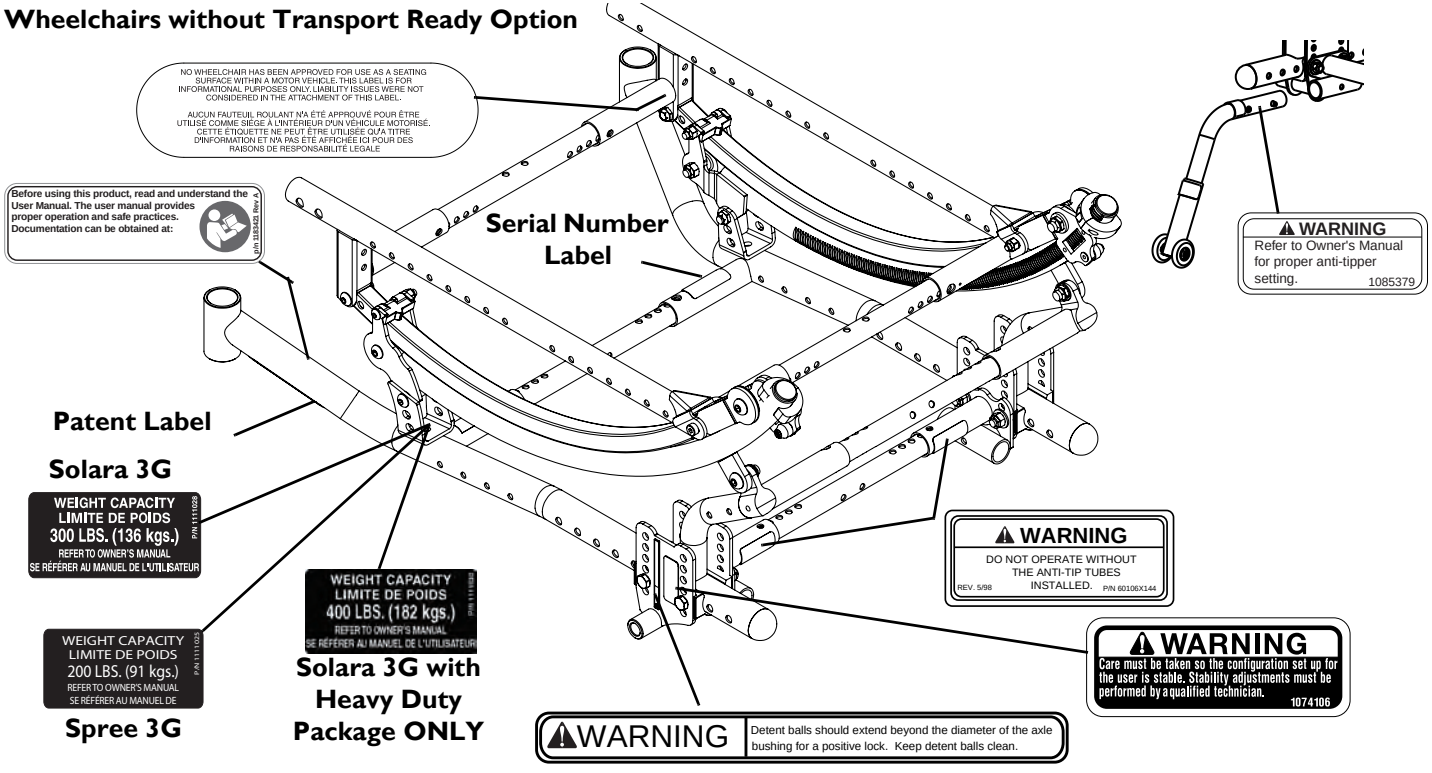

Wheelchairs with Transport Ready Option

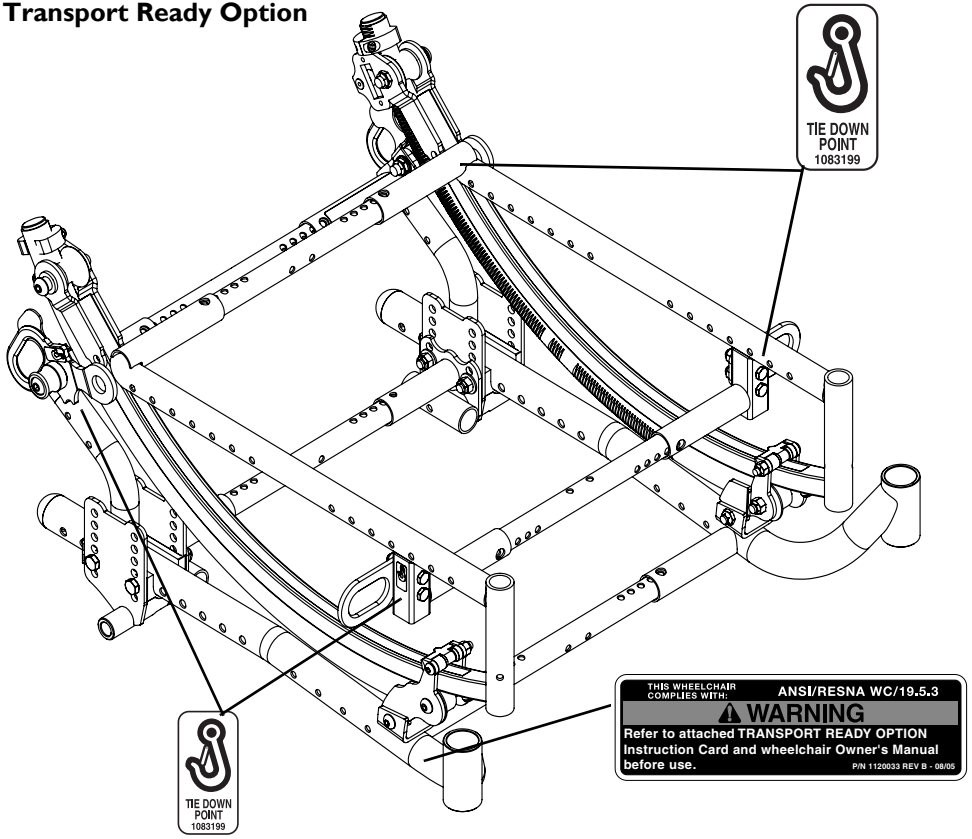

2.2 Component Identification

2.3 Specifications

	SOLARA 3G	SPREE 3G
OVERALL WIDTH: 12 INCH WHEEL 16-24 INCH WHEELS	Seat Width + 8 $^{1}/_{4}$ inches Seat Width + 9 $^{1}/_{4}$ inches (Example: 16 inch Wide Wheelchair = 24 $^{1}/_{4}$ inches Overall Width)	
OVERALL DEPTH:	Without Front Riggings Short Frame - 24 $^{3}/_{8}$ inches Medium Frame - 27 $^{3}/_{8}$ inches Long Frame - 30 $^{3}/_{8}$ inches	Without Front Riggings Short Frame - 24 $^{3}/_{8}$ inches Medium Frame - 27 $^{3}/_{8}$ inches
OVERALL HEIGHT ADJUSTABLE HEIGHT CANES: 20 INCH BACK CANES: 24 INCH BACK CANES:	* Seat-to-Floor Height + 20 - 24 inches * Seat-to-Floor Height + 21 inches * Seat-to-floor Height + 25 inches	
SEAT TO FLOOR HEIGHT:	12 $^{1}/_{2}$ - 19 inches (Seat Pan to Floor) Plus Cushion Height	
****WHEELCHAIR TRANSPORT WEIGHT:**	92 $^{1}/_{2}$ lbs	96 $^{1}/_{2}$ lbs
ANTI-TIPPERS:	Standard	
FOOTREST:	Swing-Away Footrest (Standard) Articulating Swing-Away Footrest, Elevating Swingaway Footrests, Lift Off Footrests, Contracture Footrests (Optional)	
FOOT SUPPORT TO SEAT:	11 $^{1}/_{4}$ - 16 $^{1}/_{2}$ inches	
LEG TO SEAT ANGLE:	118°	

KNEE-TO-HEEL RANGE:	4 1/2 - 24 inches	
ARMRESTS:	Dual Point - Adjustable Height - Desk or Full Length Dual Point Fixed Height - Desk or Full Length Dual Point-Flip Back Adjustable Height - T-Arms Cantilever Arms, Desk or Full Length Non Locking Cantilever arms	
ARMREST HEIGHT:	9 1/4 - 13 1/4 inches	
FRONT ARM SUPPORT TO BACK SUPPORT:	14 1/4 - 18 1/4 inches	
SEAT:	Optional	
SEAT ANGLE:	0° - 48°	2° - 48°
BACK:	Optional	
BACK ANGLE ADJUSTMENT:	90° to 120°	
REAR AXLE:	Quick-Release or Fixed	
REAR WHEELS:	12 inch: Pneumatic (Standard), Pneumatic with flat free, Urethane 16, 18 inch: Pneumatic (Standard), Pneumatic with flat free, 20, 22 and 24 inch Pneumatic, Pneumatic with flat free, Urethane	
HANDRIMS:	Aluminum Handrims, Plastic Coated, Projection	
CASTER SIZE:	6 x 2 inch with Precision Sealed Bearings (Standard); 8 x 1 or 8 x 1 1/2-inch with Precision Sealed Bearings (Optional), 4 x 1 5 x 1 or 6 x 1inch with Precision Sealed Bearings (Optional).	
SEAT WIDTH:	12 - 24 inches	12 - 18 inches

SEAT DEPTH SHORT FRAME: MEDIUM FRAME: LONG FRAME:	 12-16 inches 15-19 inches 18-22 inches	 12-16 inches 15-19 inches
BACK HEIGHT:	17-20 inches Adjustable; 20 or 24 inches Fixed	
WHEEL LOCKS:	Push-to-Lock (Standard) or Pull-to-Lock, Footlock	
TILT-IN-SPACE:	Dual Cable Trigger Mechanism or Foot Pedal Mechanism (Standard) - 5° to 50° of Tilt	
RECLINER BACK:	Dual Cable Trigger Mechanism (Optional) 90 -160° of Tilt	
FRAME:	Steel	
WEIGHT LIMITATION:	Solara 3G: 300 lbs (136 kg) Solara with Heavy Duty Package: 400 lbs (182 kg)	Spree 3G: 200 lbs (91 Kgs)
TURNING RADIUS:	25 inches	

*The seat-to-floor heights are based on pneumatic tires and pneumatic tires with flat free inserts. If wheelchair is equipped with urethane tires, subtract $^{1}/_{4}$ inch from the measurements listed above. All heights are measured with properly inflated. new tires. These heights can vary ± $^{1}/_{4}$ inch due to tire wear.

**Base chair without accessories.

3 Safety

The safety section contains important information for the safe operation and use of this product.

3.1 General Guidelines

WARNING

Risk Injury, or Damage

DO NOT use this product or any available optional equipment without first completely reading and understanding these instructions and any additional instructional material such as owner's manuals, service manuals or instruction sheets supplied with this product or optional equipment. If you are unable to understand the warnings, cautions or instructions, contact a healthcare professional, dealer or technical personnel before attempting to use this equipment - otherwise, injury or damage may occur.

A qualified technician MUST perform the initial set up of this wheelchair. also, a qualified technician must perform all procedures specifically indicated in the manual.

Use of non-Invacare accessories may result in injury or damage.

Invacare products are specifically designed and manufactured for use in conjunction with Invacare accessories. Accessories designed by other manufacturers have not been tested by Invacare and are not recommended for use with Invacare products.

DO NOT use non-Invacare accessories.

DANGER

Risk of Death, Serious Injury or Damage

Use of incorrect or improper replacement (service) parts may cause death, serious injury, or damage.

Replacement parts MUST match original Invacare parts.

ALWAYS provide the wheelchair serial number to assist in ordering the correct replacement parts.

DANGER

Risk of Death, Serious Injury, or Damage

Lighted cigarettes dropped onto an upholstered seating system can cause a fire resulting in death, serious injury, or damage.

Wheelchair occupants are at particular risk of death or serious injury from these fires and resulting fumes because they may not have the ability to move away from the wheelchair.

DO NOT smoke while using this wheelchair.

NOTICE

THE INFORMATION CONTAINED IN THIS DOCUMENT IS SUBJECT TO CHANGE WITHOUT NOTICE.

Check all parts for shipping damage and test before using. In case of damage, DO NOT use. Contact Invacare/Carrier for further instruction.

Repair and Service Information

WARNING

Unless otherwise noted, all service and adjustment should be performed while the wheelchair is unoccupied.

After ANY adjustments, repair or service and BEFORE use, make sure all attaching hardware is tightened securely - otherwise injury or damage may result.

3.2 Wear and Tear Items

Normal wear and tear items and components include but are not limited to: all upholstery items including seat and back upholstery, arm and calf pads, cushions, wheels, tires and casters.

Invacare reserves the right to ask for any item back that has an alleged defect in workmanship. See Warranty policy shipped with the product for specific warranty information.

Refer to User Manual for proper preventative maintenance schedule and use of the product.

This is just a general guideline and does not include items damaged due to abuse and misuse.

PRODUCT TYPE	PRODUCT WEAR AND TEAR PART
WHEELCHAIRS:	Wheels • Brake Assembly/Wheel Locks • Hand grips
UPHOLSTERY AND SEATING:	Arm Pads • Seat Cushion Foam • Seat Cushion Covers • Back Cushion Foam • Back Cushion Covers • Headrest Foam • Headrest Covers • Footplate Covers • Calf Pad (if applicable) Foam and Cover

General Warnings

WARNING

To determine and establish your particular safety limits, practice bending, reaching and transferring activities in the presence of a qualified healthcare professional before attempting active use of the wheelchair.

The necessary back angle (90°, 95°, 100°, 105°, 110°, 115° or 120°) MUST be selected before repositioning the rear wheels forward.

DO NOT operate the tilt-in-space if the trigger release levers and cables are not properly adjusted to ensure that the tilt-in-space is locked in place when engaged.

Pinch point may occur when returning the tilted seat to the full upright position. Make sure the hands and body of the occupant, attendants and bystanders are clear of all pinch points before returning the tilted seat to the full upright position.

DO NOT stand on the frame of the wheelchair.

DO NOT use the footplates as a platform. When getting in or out of the wheelchair, make sure that the footplates are in the upward position.

ALWAYS use the handrims for self-propulsion. Inasmuch as the handrims are an option on this wheelchair (you may order with or without the handrims), Invacare strongly recommends ordering the handrims as an additional safeguard for the wheelchair user.

Make sure detent balls of the quick-release pin are fully released before operating the wheelchair.

The detent balls MUST be protruding past the top of the seat plate assembly for a positive lock.

Keep detent balls clean.

Wheel Locks

WARNING

DO NOT attempt to stop a moving wheelchair with wheel locks. Wheel locks are not brakes.

Engaging the wheel locks may not prevent the wheelchair from moving on all floor surfaces including those that may be wet or slick. ALWAYS exercise caution when transferring into or out of the wheelchair.

Anti-tippers

WARNING

Anti-tippers MUST be attached at all times.

Anti-tippers are specific to the different seat-to-floor angles and/or seat-to-floor heights. Refer to Installing the Anti-Tippers on page 50 for correct usage and adjustment. If these requirements cannot be achieved, DO NOT use the wheelchair. Contact a qualified technician. If changing the seat-to-floor height with or without a change to seat-to-floor angle, the correct anti-tippers must be used to maintain a $1^{1}/_{2}$ to 2-inch ground clearance.

Anti-tippers MUST be fully engaged and release buttons fully protruding out of the adjustment holes.

Ensure both anti-tippers are adjusted to the same mounting hole.

The manual wheelchair is intended for indoor and outdoor use on firm surfaces. When outdoors on wet, soft ground or on gravel surfaces, anti-tippers may not provide the same level of protection against tip over. DO NOT operate on soft surfaces such as sand, grass or gravel.

Hand Grips

WARNING

ALWAYS check hand grips for looseness before using the wheelchair. If loose and/or worn, replace IMMEDIATELY.

When cleaning rear cane or hand grip areas use only a clean towel lightly dampened with cool water. Verify that grips are dry prior to use. Use of soap or ammonia based cleaning solutions will result in the hand grips sliding off the cane assembly. Failure to observe this warning may result in injury to the user or bystanders.

If the wheelchair is exposed to extreme temperature (above 100°F or below 32°F), high humidity and/or becomes wet, prior to use, ensure that the handgrips DO NOT twist on the handle. Otherwise, damage or injury may occur.

Seat Positioning Straps

WARNING

ALWAYS wear your seat positioning strap. Inasmuch as the seat positioning strap is an option on this wheelchair (you may order with or without the seat positioning strap), Invacare strongly recommends ordering the seat positioning strap as an additional safeguard for the wheelchair user. The seat positioning strap is a positioning strap only. It is not designed for use as a safety device withstanding high stress loads such as auto or aircraft safety belts. If signs of wear appear, strap MUST be replaced IMMEDIATELY.

With regards to seat/chest positioning straps - it is the obligation of the DME dealer, therapists and other healthcare professionals to determine if a seat/chest positioning strap is required to ensure the safe operation of this equipment by the user. Serious injury can occur in the event of a fall from a wheelchair.

Wheelchairs with TRRO or TRBKTS Only

WARNING

Only use the transport brackets included with TRRO and TRBKTS for the purposes described in this manual.

Wheelchair Tie Down Restraints (TRRO or TRBKTS)

WARNING

TRRO includes four factory-installed transport brackets and a wheelchair anchored pelvic belt. TRRO has been crash-tested in accordance with ANSI/RESNA WC Vol 1 Section 19 Frontal Impact Test requirements for wheelchairs with a 168 lb crash dummy, which corresponds to a person with a weight of 114 to 209 lbs.

TRBKTS includes four factory-installed wheelchair transport brackets. TRBKTS has not been crash-tested in accordance with WC 19. Use these transport brackets only to secure an unoccupied wheelchair during transport.

Only use the transport brackets included with TRRO and TRBKTS for the purposes described in this manual.

As of this date, the Department of Transportation has not approved any tie-down systems for transportation of a user while in a wheelchair, in a moving vehicle of any type. It is Invacare's position that users of wheelchairs should be transferred into appropriate seating in vehicles for transportation and use be made of the restraints made available by the auto industry. Invacare cannot and does not recommend any wheelchair transportation systems.

Refer to Transport Ready Option on page 57for more information about transporting the wheelchair.

Only use the transport brackets included with TRRO and TRBKTS for the purposes described in this manual.

Lifting

WARNING

DO NOT attempt to lift the wheelchair by any removable (detachable) parts. Lifting by means of any removable (detachable) parts of the wheelchair may result in injury to the user or damage to the wheelchair.

DO NOT use the spreader bar or stroller handles for lifting or transporting the wheelchair. DO NOT use the spreader bar as a weight bearing support.

Ramps, Slopes, Inclines, and Obstacles

WARNING

DO NOT traverse, climb or go down ramps or slopes greater than 9°.

DO NOT attempt to move up or down an incline with a water, ice or oil film.

DO NOT attempt to ride over curbs or obstacles. Doing so may cause your wheelchair to tip over and cause bodily harm to you or damage to the wheelchair.

NEVER leave an unoccupied wheelchair on an incline.

DO NOT attempt to stop the wheelchair while on a sloped surface.

Invacare strongly recommends proceeding down ramps or slopes slowly to avoid hard braking or sudden stops.

DO NOT leave elevating legrests in the fully extended position when proceeding down ramps or slopes.

NEVER leave the occupied wheelchair unattended at any time, especially on an incline.

Stability - All Models

WARNING

The back height, seat depth, back angle, seating system, tilt angle, seat height, size/position of the rear wheels, size/position of the front casters, as well as the user condition directly relate to the stability of the wheelchair. Any change to one or any combination of the eleven may cause the wheelchair to decrease in stability. These adjustments must be performed by a qualified technician.

ALWAYS make sure that the wheelchair is stable before using the tilt-in-space

NOTE: When changes to the left hand column occur, follow across the chart and refer to the X procedure to maintain the proper stability, safety and handling of the wheelchair.	BACK HEIGHT	SEAT DEPTH	BACK ANGLE	SEATING SYSTEM	TILT ANGLE	CASTER SIZE	CASTER POSITION	WHEEL SIZE	WHEEL POSITION	USER CONDITION	WHEEL LOCKS	ANTI-TIPPERS	LOCKING COLLAR	TILT CABLES
BACK HEIGHT	•	X	X	X	X	X	X	X	X	N/A	N/A	N/A	N/A	N/A
SEAT DEPTH	X	•	X	X	N/A	X	X	X	X	N/A	N/A	N/A	X	X
BACK ANGLE	X	X	•	X	X	X	X	X	X	N/A	N/A	N/A	X	X
SEATING SYSTEM	X	X	X	•	X	X	X	X	X	X	N/A	N/A	X	X
TILT ANGLE	N/A	N/A	X	N/A	•	N/A	N/A	N/A	N/A	N/A	N/A	N/A	X	N/A
CASTER SIZE	X	N/A	X	N/A	N/A	•	X	X	X	N/A	X	X	X	N/A
CASTER POSITION	X	N/A	X	N/A	N/A	X	•	X	X	N/A	X	X	X	N/A
WHEEL SIZE	X	N/A	X	N/A	N/A	X	X	•	X	N/A	X	X	X	N/A
WHEEL POSITION	X	N/A	X	N/A	N/A	X	X	X	•	N/A	X	X	X	N/A
USER CONDITION	X	X	X	X	X	X	X	X	X	•	N/A	N/A	N/A	N/A
SEAT HEIGHT	X	N/A	X	X	X	X	X	X	X	N/A	X	X	X	N/A

Stability - All Models Except Recliners

WARNING

To maintain maximum stability, position the rear wheel axle mounting brackets in the most rearward position. Moving the rear wheels to any of the other mounting positions causes the wheelchair to decrease in stability.

If moving the rear wheel axle mounting brackets to any forward position, ensure the wheelchair is stable before using.

ALWAYS ensure stability before using maximum amount of tilt-in-space or moving the rear wheel axle mounting brackets forward. Test wheelchair before it is occupied by the end user to ensure safety.

Stability - Recliner Models Only

WARNING

Before using any recline position of this wheelchair, make sure the rear wheel axle mounting brackets are in the most rearward position in the axle mounting plate to maintain the stability of the wheelchair. Do not change the handling/ maneuverability of the wheelchair by moving the rear wheel axle mounting brackets to any of the forward positions. Moving the rear wheel axle mounting brackets to any of the forward positions will change the center of gravity of the wheelchair, making the wheelchair less stable.

ALWAYS make sure that the wheelchair is stable both in the full reclined (back at 160°) position and the full upright (back at 90°) position before using the recliner option.

Before using the recliner option, make sure the anti-tipper wheel assemblies are in the lowest adjustment hole (adjustment hole closest to the ground/floor).

ALWAYS engage both wheel locks while reclining or inclining (sitting up) the wheelchair.

Both gas cylinders MUST be operational and adjusted properly before using the recliner. DO NOT operate the recliner option if only one of the gas cylinders is operational or adjusted properly.

Make sure the patient is properly positioned in the wheelchair before reclining or inclining (sitting up) to maintain maximum stability and safety.

Stability - Recliner Models Only (Continued)

WARNING

When returning the occupant of the wheelchair to the full upright position, more body strength will be required for approximately the last twenty degrees of incline (sitting up). Make sure to use proper body mechanics (use your legs) or seek assistance to avoid injury.

ALWAYS return the back to the upright position before lifting the wheelchair.

Tire Pressure

WARNING

DO NOT use your wheelchair unless it has the proper tire pressure (P.S.I.). DO NOT overinflate the tires. Failure to follow these recommendations may cause the tire to explode and cause bodily harm. The recommended tire pressure is listed on the side wall of the tire.

Weight Limitation

WARNING

Invacare Solara 3G wheelchair has a weight limitation of 300 lbs (136 kgs).

Invacare Solara 3G wheelchair with the Heavy Duty package has a weight limitation of 400 lbs (181 kgs).

Invacare Spree 3G wheelchair has a weight limitation of 200 lbs (91 kgs).

Weight Training

WARNING

Invacare DOES NOT recommend the use of its wheelchairs as a weight training apparatus. Invacare wheelchairs have NOT been designed or tested as a seat for any kind of weight training. If occupant uses said wheelchair as a weight training apparatus, INVACARE SHALL NOT BE LIABLE FOR BODILY INJURY AND THE WARRANTY IS VOID.

Storage

WARNING

Risk of Serious Injury or Damage

Storing or using the wheelchair near open flame or combustible products can result in serious injury or damage.

Avoid storing or using the wheelchair near open flame or combustible products.

Storing the wheelchair in a damp area or when wet may cause rust or corrosion of wheelchair parts resulting in injury or damage.

DO NOT use the wheelchair in a shower, pool or other body of water.

DO NOT store the wheelchair in a damp or humid area.

Avoid extreme weather such as rain or snow when possible.

Avoid excessive moisture or humidity.

If exposed to water, dry the wheelchair as soon as possible.

Wheelchair User

WARNING

As a manufacturer of wheelchairs, Invacare endeavors to supply a wide variety of wheelchairs to meet many needs of the end user. However, final selection of the type of wheelchair to be used by an individual rests solely with the user and his/her healthcare professional capable of making such a selection.

Information for Healthcare Professionals/Assistants

WARNING

When assistance to the wheelchair user is required, remember to use good body mechanics. Keep your back straight and bend your knees whenever tipping the wheelchair or traversing curbs, or other impediments.

The Solara wheelchair MUST be operated by a healthcare professional or assistant when in any tilt position.

Anterior (Forward) Tilt

DO NOT operate the wheelchair when the seat frame is in the anterior (forward) tilt position (frame stops in the lower position and approximately 5° forward tilt). Serious bodily injury may occur to the patient and/or the assistant(s).

Anterior (forward) tilt is a feature of this wheelchair designed for the use of a healthcare professional or assistant only. Engagement of the anterior (forward) tilt MUST NEVER be performed by the wheelchair user. When anterior (forward) tilt is needed, it MUST ALWAYS be engaged by a healthcare professional or assistant. Make sure the occupant of the wheelchair is properly positioned and ALWAYS engage both wheel locks.

When learning a new assistance technique, have an experienced assistant help you before attempting it alone.

3.3 Safety/Handling of Wheelchairs

"Safety and Handling" of the wheelchair requires the close attention of the wheelchair user as well as the assistant. This manual points out the most common procedures and techniques involved in the safe operation and maintenance of the wheelchair. It is important to practice and master these safe techniques until you are comfortable in maneuvering around the frequently encountered architectural barriers.

Use this information only as a "basic" guide. The techniques that are discussed on the following pages have been used successfully by many.

Individual wheelchair users often develop skills to deal with daily living activities that may differ from those described in this manual. Invacare recognizes and encourages each individual to try what works best for him/her in overcoming architectural obstacles that they may encounter, however ALL WARNINGS and CAUTIONS given in this manual MUST be followed. Techniques in this manual are a starting point for the new wheelchair user and assistant with "safety" as the most important consideration for all.

Stability and Balance

WARNING

Be aware that carrying heavy objects on your lap while occupying the wheelchair may adversely affect the stability of the wheelchair, resulting in serious bodily injury to the user, damage to the wheelchair and surrounding property

This wheelchair has been designed to accommodate one individual. If more than one individual occupies the wheelchair this may adversely affect the stability of the wheelchair, resulting in serious bodily injury to the user and passenger and damage to the wheelchair and surrounding property.

To assure stability and proper operation of your wheelchair, you MUST at all times maintain proper balance. Your wheelchair has been designed to remain upright and stable during normal daily activities as long as you DO NOT move beyond the center of gravity.

Virtually all activities which involve movement in the wheelchair have an effect on the center of gravity. Invacare recommends using seat/chest positioning straps for additional safety while involved in activities that shift your weight.

DO NOT lean forward out of the wheelchair any further than the length of the armrests. Make sure the casters are pointing in the forward position whenever you lean forward. This can be achieved by advancing the wheelchair and then reversing it in a straight line.

The Invacare Solara 3G/ Spree 3G wheelchair should be operated by an assistant when the wheelchair is in any tilted position.

WARNING

DO NOT attempt to reach objects if you have to move forward in the seat or pick them up from the floor by reaching down between your knees.

The back height, seat depth, back angle, seating system, tilt angle, seat height, size/position of the rear wheels, size/position of the front casters, as well as the user condition directly relate to the stability of the wheelchair. Any change to one or any combination of the eleven may cause the wheelchair to decrease in stability. These adjustments MUST be performed by a qualified technician.

Many activities require the wheelchair user to reach, bend and transfer in and out of the wheelchair. These movements will cause a change to normal balance, center of gravity, and weight distribution of the wheelchair.

To determine and establish your particular safety limits, practice bending, reaching and transferring activities in several combinations in the presence of a qualified healthcare professional before attempting active use of the wheelchair.

Proper positioning is essential for your safety. When reaching, leaning, bending or bending forward, it is important to use the casters as a tool to maintain stability and balance.

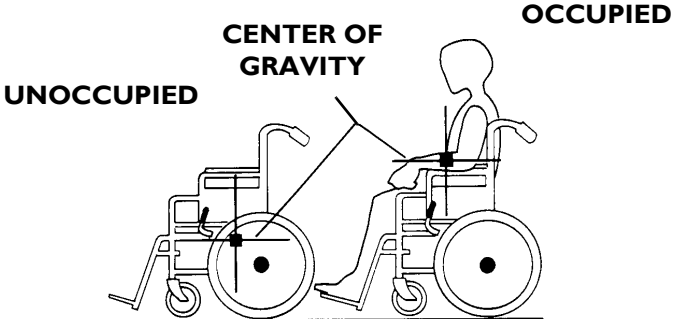

FIGURE 1 Stability and Balance

Reaching, Leaning and Bending

WARNING

DO NOT shift your weight or sitting position toward direction you are reaching as the wheelchair may tip over.

DO NOT attempt to reach objects if you have pick them up from the floor by reaching down between your knees.

DO NOT lean over the top of the back upholstery to reach objects behind you, as this may cause the wheelchair to tip over.

Forward

Position the front casters so that they are extended as far forward as possible and engage wheel locks.

Backwards

Position wheelchair as close as possible to the desired object. Point front casters forward to create the longest possible wheelbase. Reach back only as far as your arm will extend without changing your sitting position.

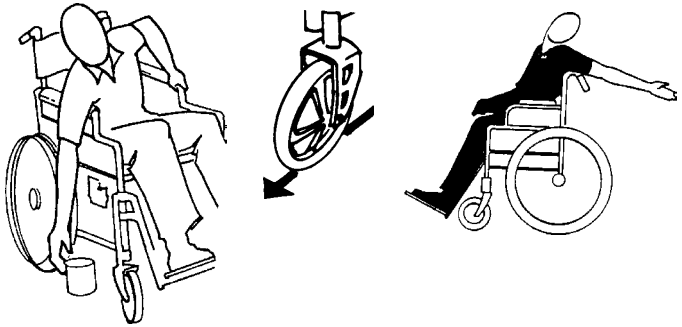

FIGURE 2 Reaching, Leaning and Bending - Forward/ Backwards

Coping With Everyday Obstacles

Coping with the irritation of everyday obstacles can be somewhat alleviated by learning how to manage your wheelchair. Keep in mind your center of gravity to maintain stability and balance.

Tipping

WARNING

DO NOT tip the wheelchair without assistance.

When lowering the front casters of the wheelchair, DO NOT let the wheelchair drop the last few inches to the ground. This could result in injury to the occupant and/or damage to the wheelchair.

When tipping the wheelchair, an assistant should grasp the back of the wheelchair on a non-removable (non-detachable) part. Inform the wheelchair occupant before tipping the wheelchair and remind him/her to lean back. Be sure the occupant's feet and hands are clear of all wheels and/or pinch points.

After mastering the techniques of tipping the wheelchair, use one of the following methods to tackle curbs, short stairs, etc.

Tipping - Curbs: Method 1 - Wheelchair with Step Tubes

Place foot on the step tube and begin to tilt the wheelchair toward you. Apply a continuous downward motion until the balance point is achieved and the front casters clear the curb. At this point, the assistant will feel a difference in the weight distribution.

Roll the wheelchair forward and slowly lower the front of the wheelchair in one continuous movement onto the sidewalk. DO NOT let the wheelchair drop the last few inches to the ground. This could result in injury to the occupant. Push the wheelchair forward until the rear wheels roll up and over the curb.

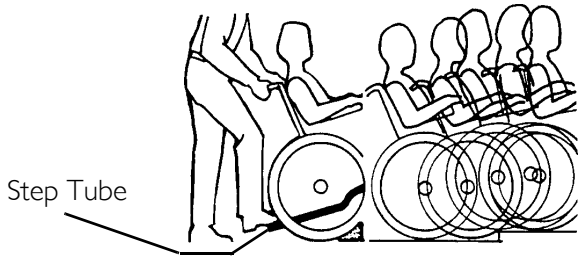

FIGURE 3 Tipping - Curbs: Method 1 - Wheelchair with Step Tubes

Tipping - Curbs: Method 2 - Wheelchair without Step Tube

This method requires two assistants. The second assistant should be positioned at the front of the wheelchair lifting upward on a non-removable (non-detachable) part of the wheelchair frame when lifting the wheelchair and stabilizing the wheelchair when the wheelchair is being lowered to the ground.

Rotate the anti-tippers so the anti-tip wheels are pointing up. The first assistant should stand on the sidewalk and turn the wheelchair so that the rear wheels are against the curb. The wheelchair should be tilted back to the balance point and, in one continuous upward movement, the rear wheels should be pulled up and over the curb. DO NOT return the front casters to the ground until the wheelchair has been pulled backward far enough for the front casters to clear the edge of the curb.

Roll the wheelchair backward and slowly lower the wheelchair in one continuous movement. DO NOT let the wheelchair drop the last few inches to the ground. This could result in injury to the occupant.

Rotate the anti-tippers so the anti-tip wheels are pointing down.

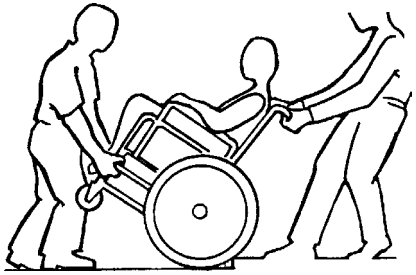

FIGURE 4 Tipping - Curbs: Method 2 - Wheelchair without Step Tube

Escalators

WARNING

DO NOT use an escalator to move a wheelchair between floors. Serious bodily injury may occur.

Stairways

WARNING

Extreme caution is advised when it is necessary to move an occupied wheelchair up or down the stairs. Invacare recommends that, if possible, the user be removed from the wheelchair prior to moving. Invacare recommends using two assistants and making thorough preparations. Make sure to use ONLY secure, non-detachable parts for hand-hold supports.

Moving Up Stairs

1. If necessary, rotate the anti-tippers so the wheels are facing up.
2. One assistant (positioned behind the wheelchair), securely grasps a non-removable (non-detachable) part of the wheelchair for leverage and tilts the wheelchair back to the balance point.
3. After the wheelchair has been tilted back to the balance point, the assistant behind the wheelchair backs the wheelchair up against the first step.
4. The second assistant (positioned in the front of the wheelchair), with a firm hold on a non-detachable part of the framework, lifts the wheelchair up and on to the next stair above and steadies the wheelchair as the assistant behind the wheelchair places one foot on the next stair above and repeats process.
5. The wheelchair should not be lowered until the last stair has been negotiated and the wheelchair has been rolled away from the stairway.
6. If necessary, rotate the anti-tippers so the wheels are facing down.

Moving Down Stairs

1. If necessary, rotate the anti-tippers so the wheels are facing up.
2. One assistant (positioned behind the wheelchair), securely grasps a non-removable (non-detachable) part of the wheelchair for leverage and tilts the wheelchair back to the balance point.
3. After the wheelchair has been tilted back to the balance point, the assistant behind the wheelchair rolls the wheelchair up to the edge of the first step.
4. The second assistant (positioned in the front of the wheelchair), with a firm hold on a non-detachable part of the framework, lowers the wheelchair down and on to the next stair below and steadies the wheelchair as the assistant in the rear places one foot on the next stair below and repeats process.
5. The wheelchair should not be lowered until the last stair has been negotiated and the wheelchair has been rolled away from the stairway.
6. If necessary, rotate the anti-tippers so the wheels are facing down.

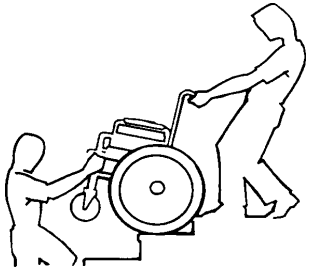

FIGURE 5 Stairways

3.4 Transferring To and From Other Seats.

WARNING

Before attempting to transfer in or out of the wheelchair, every precaution should be taken to reduce the gap distance. Turn both casters parallel to the object you are transferring onto. Also be certain the wheel locks are engaged to help prevent the wheels from moving.

CAUTION

When transferring, position yourself as far back as possible in the seat. This will prevent damaged upholstery and the possibility of the wheelchair tipping forward

This activity may be performed independently provided you have adequate mobility and upper body strength.

1. Position the wheelchair as close as possible along side the seat to which you are transferring, with the front casters parallel to it.
2. Engage wheel locks.
3. Remove or flip back armrests.
4. Shift body weight into seat with transfer.

During independent transfer, little or no seat platform will be beneath you. Use a transfer board if at all possible.

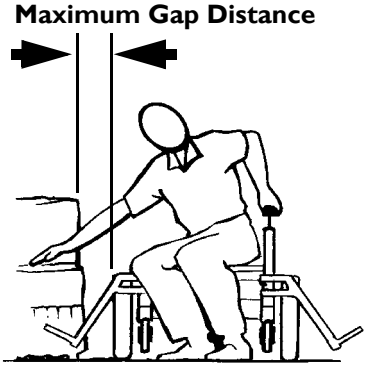

FIGURE 6 Transferring To and From Other Seats.

4 Operation

WARNING

After any adjustments, repair or service and before use, make sure all attaching hardware is tightened securely - otherwise injury or damage may occur

4.1 Installing/Removing Footrests

This procedure applies to the lift off footrest assembly and elevating legrest.

Installing

1. Turn footrest to the side (open footplate is perpendicular to the wheelchair).
2. Insert the footrest assembly mounting pin into the mounting tube of the wheelchair frame.
3. Rotate the footrest towards the inside of the wheelchair until it locks into place.
4. The footplate will be on the inside of the wheelchair when locked in place.
5. Repeat STEPS 1-3 for the other footrest assembly.
6. If necessary, adjust the footrest height. Refer to Adjusting Footrest Height on page 82 or Installing Impact Guards/Calf Strap/H-Calf Strap on page 38.

Removing

1. Push the footrest release lever inward while rotating the front rigging outward.
2. Lift the footrest assembly out of the mounting pin of the wheelchair frame.
3. Repeat STEPS 1-2 for opposite side, if necessary.

Only the swing away footrest is shown. The lift off footrest assembly and elevating legrest install/remove in the same manner.

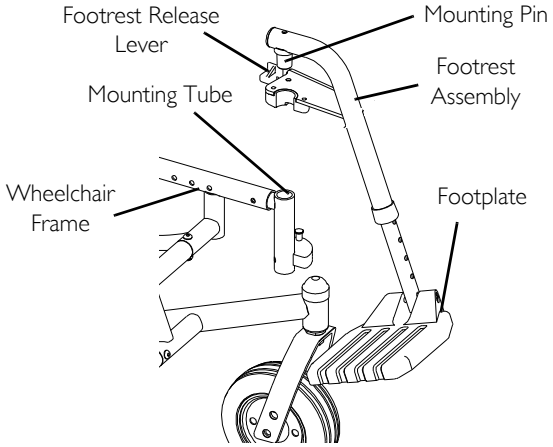

Only 60° Footrest shown for clarity. Others will attach the same way.

FIGURE 1 Installing/Removing Footrests

4.2 Raising/Lowering the Elevating Legrest

1. Perform one of the following:
   - Raising: Lift legrest assembly up to desired height.
   - Lowering: Lift elevating legrest assembly up with one hand. While supporting the elevating legrest assembly (and user's leg), pull release lever up with other hand and lower legrest assembly to desired height.

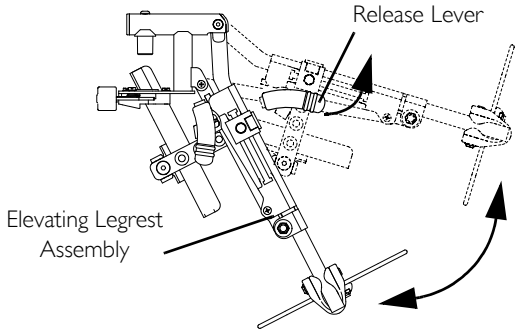

FIGURE 2 Raising/Lowering the Elevating Legrest

4.3 Installing Impact Guards/Calf Strap/H-Calf Strap

Impact guards are standard equipment on Model ST footrests. No assembly is required.

1. Remove impact guard/calf strap from packaged container.
2. Secure the impact guards to the footrest frame.
3. Secure the calf strap around the footrest frame (with the impact guards attached).

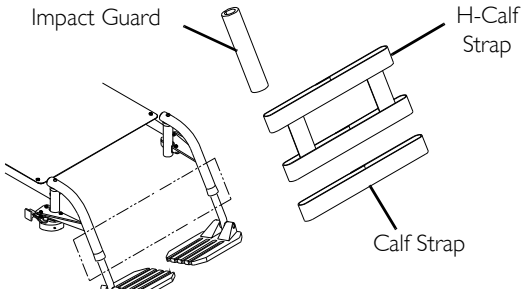

FIGURE 3 Installing Impact Guards/Calf Strap/H-Calf Strap

4.4 Installing/Removing Dual Point Armrests (Fixed And Adjustable Height)

WARNING

Make sure the locking mechanism is secured before using wheelchair.

Installing Armrest

1. Unlock armrest assembly by flipping the arm assembly release lever located on the side rail to the UP (horizontal) position (Detail “A”)..

Armrest locks MUST be in the unlocked position when placing arm into the arm sockets.

2. Install armrest assembly into the arm sockets.
3. When installed, lock the armrest assembly by pressing the release lever into the down (vertical) position (Detail "A").
4. Repeat STEPS 1-3 for the opposite side of the wheelchair.
5. For adjustable height dual point armrests, adjust the height if necessary. Refer to Adjusting the Height of the Adjustable Height Armrests on page 68.

Removing Armrest

1. Unlock armrest assembly by flipping the arm assembly release lever located on the side rail to the up (horizontal) position (Detail "A").
2. Pull up on the armrest assembly to remove the armrest from the arm socket.
3. Repeat STEPS 1-2 for opposite side of wheelchair, if necessary.

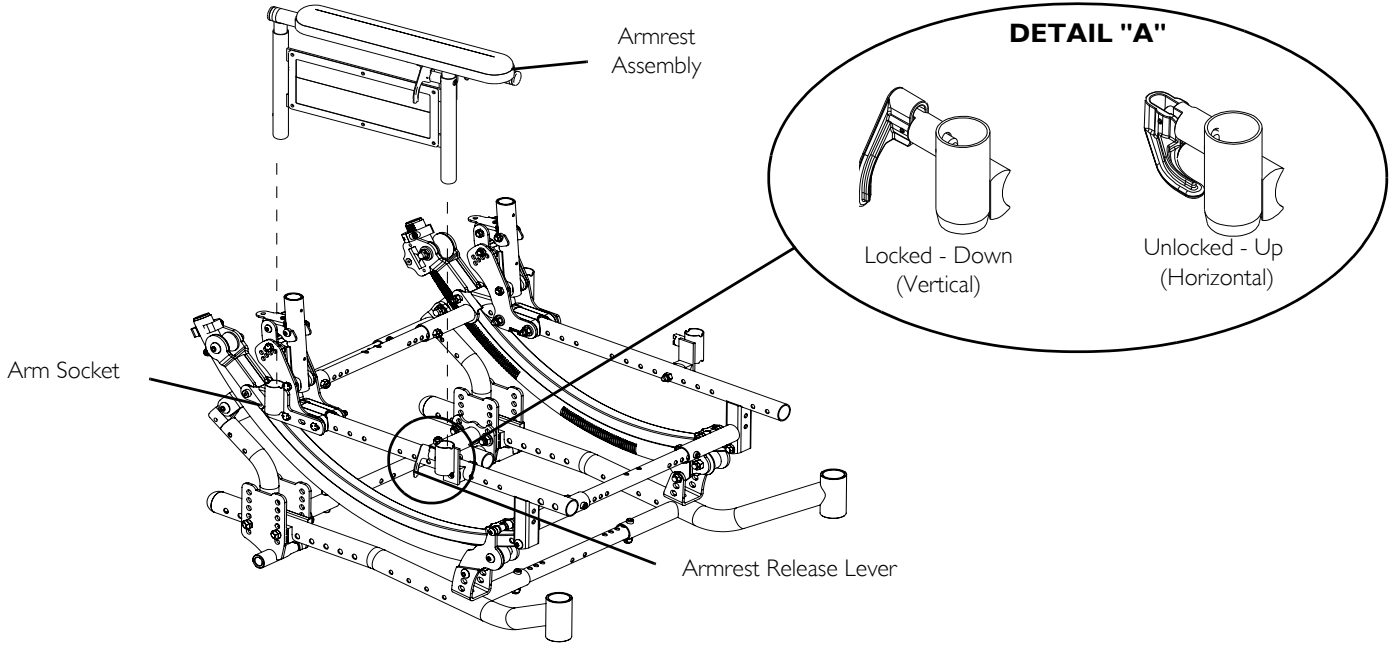

FIGURE 4 Installing/Removing Dual Point Armrests (Fixed And Adjustable Height)

4.5 Removing/Installing and Using Flipback Armrests

Removing/Installing Flip Back Armrest

Removing

1. Flip the armrest release lever to the unlocked position (Detail "A").
2. Pull the quick release pin out of the rear arm socket.
3. Pull up on the flip back armrest to remove from the front and rear arm sockets.
4. Repeat STEPS 1-3 for remaining flip back armrest, if necessary.

Installing

1. Ensure that the armrest release lever is in the unlocked (horizontal) position (Detail "A").
2. Install flip back armrest into the front and rear arm sockets.
3. Flip armrest release lever to the locked (vertical) position (Detail "A").
4. Install the quick release pin into the rear arm socket.
5. Repeat STEPS 1-4 for remaining flip back armrest, if necessary.

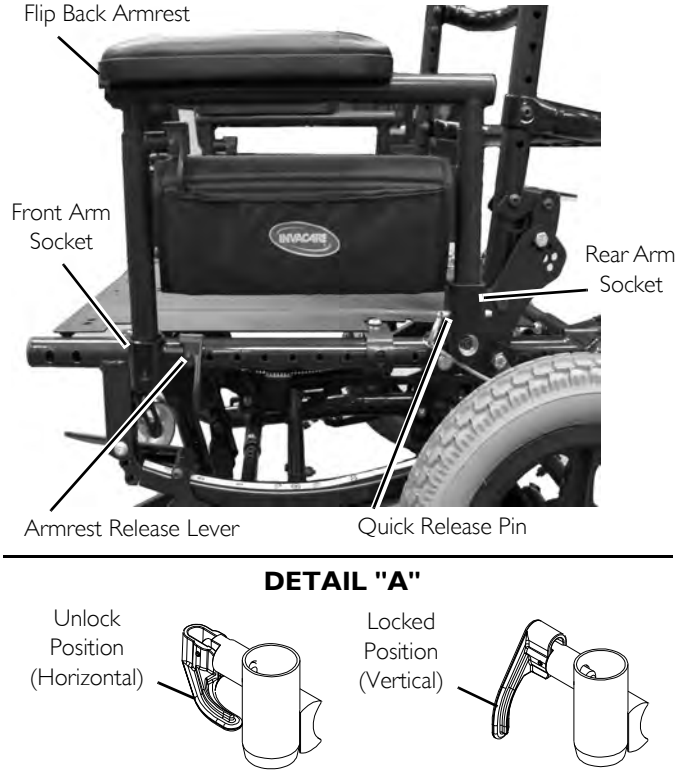

FIGURE 5 Removing/Installing Flip Back Armrest

Using Armrest

WARNING

Make sure the locking mechanism is secured before using wheelchair.

1. Flip the armrest release lever to the unlocked position (Detail "A").
2. Pull the front of the flip back armrest straight up and out of the front arm socket and rotate towards the rear of the wheelchair.
3. Rotate the flip back armrest towards the front of the wheelchair and then downward into the front arm socket.
4. Flip armrest release lever to the locked (vertical) position (Detail "A").

FIGURE 6 Using Armrest

4.6 Installing/Removing T-Arms

Installing T-Arms

1. Position the T-Arm over the T-Arm socket on the wheelchair frame.

   Make sure the locking lever is towards the front of the wheelchair.

2. Slide T-Arm into T-Arm socket until the locking lever is in the slot in the T-Arm socket and an audible "click" is heard.
3. Pull up on T-Arm to make sure T-Arm is locked in place.

   If the T-Arm does not slide in the T-Arm socket as desired contact a qualified technician/dealer.

   If necessary, adjust the T-Arm to the desired height. Refer to Adjusting T-Arm Height on page 69.

   for additional T-Arm adjustments contact a qualified technician/dealer.

4. Repeat STEPS 1-3 for opposite side of wheelchair.

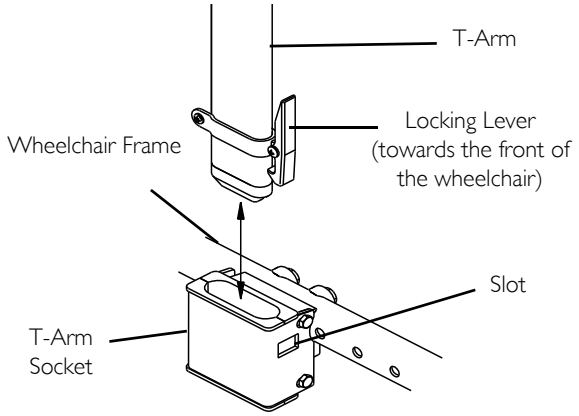

FIGURE 7 Installing/Removing T-Arms

Removing T-Arms

1. Press the locking lever in and lift the T-Arm straight up and out of the T-Arm socket..

   If the T-Arm does not slide in the T-Arm socket as desired contact a qualified technician/dealer.

2. Repeat STEP 1 for opposite side of the wheelchair.

4.7 Using Locking Cantilever Arms

1. Push the locking mechanism actuator towards the front of the wheelchair.
2. While holding the locking mechanism actuator, pull up on the cantilever arm towards the rear of the wheelchair.

   If necessary, the locking mechanism in the cantilever arm can be repositioned so the cantilever arm will open down instead of up. For this adjustment, contact a qualified technician.

3. To lock the cantilever arm, push down until there is an audible click.
4. Pull up on the cantilever arm to make sure it is locked in place.

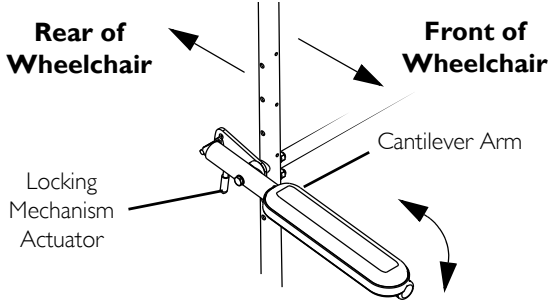

FIGURE 8 Using Locking Cantilever Arms

4.8 Using Non-Locking Cantilever Arms

WARNING

DO NOT use lap trays with non-locking cantilever arms.

1. Pull the end of the cantilever arm down to lower the cantilever arm.
2. Pull the end of the cantilever arm up to move it out of the way.

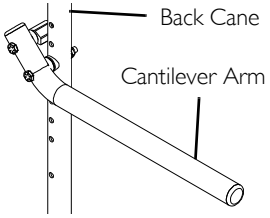

FIGURE 9 Using Non-Locking Cantilever Arms

4.9 Using the Wheel Locks

WARNING

ALWAYS engage both wheel locks and reduce the gap distance before transferring to and from the wheelchair. Turn all casters parallel to the object you are transferring onto.

Wheel locks are not brakes. DO NOT attempt to stop a moving wheelchair with the wheel locks.

Engaging the wheel locks may not prevent the wheelchair from moving on all floor surfaces including those that may be wet or slick. ALWAYS exercise caution when transferring into or out of your wheelchair.

Always keep hands and fingers clear of moving parts to avoid injury.

If wheel locks do not engage properly (wheels move while hublocks are locked) or do not disengage properly contact a qualified technician.

Pull to Lock Wheel locks

1. Pull the wheel lock handle forward to engage the wheel locks.
2. Reverse STEP 1 to disengage the wheel locks.

Push to Lock Wheel locks

1. Push the wheel lock handle forward to engage the wheel locks.
2. Reverse STEP 1 to disengage the wheel locks.

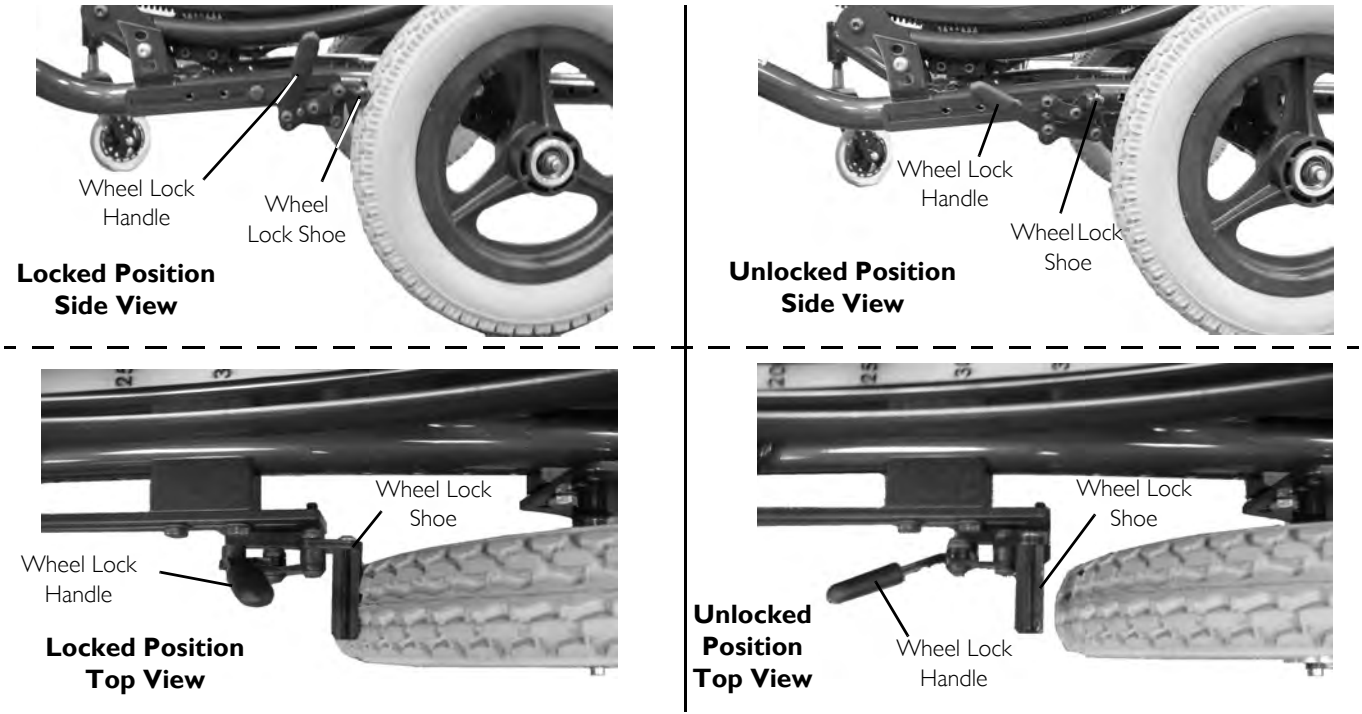

FIGURE 10 Using the Pull to Lock Wheel Locks

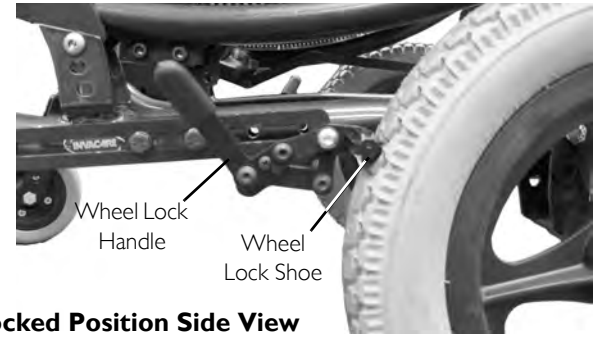

Locked Position Side View

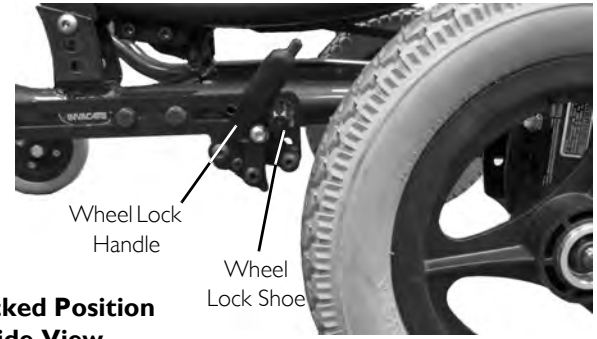

Unlocked Position Side View

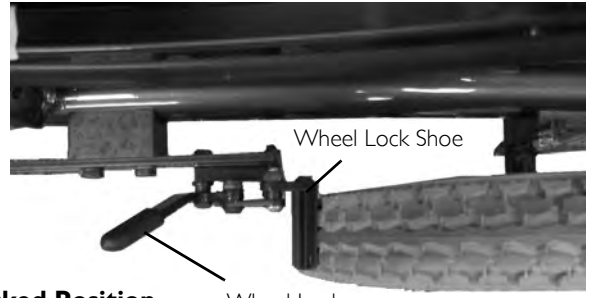

Locked Position Top View

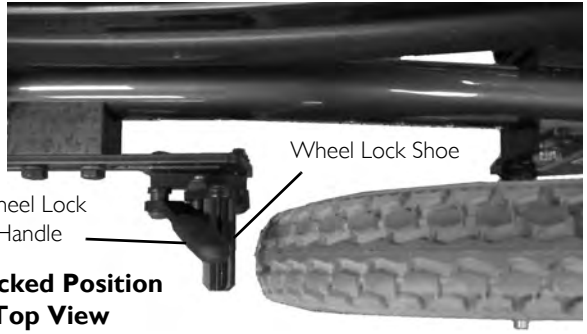

Unlocked Position Top View

FIGURE 11 Using the Push to Lock Wheel Locks

Footlock

1. Push down on the footlock lever to engage the footlock.
2. Lift up on footlock lever to disengage the footlock.

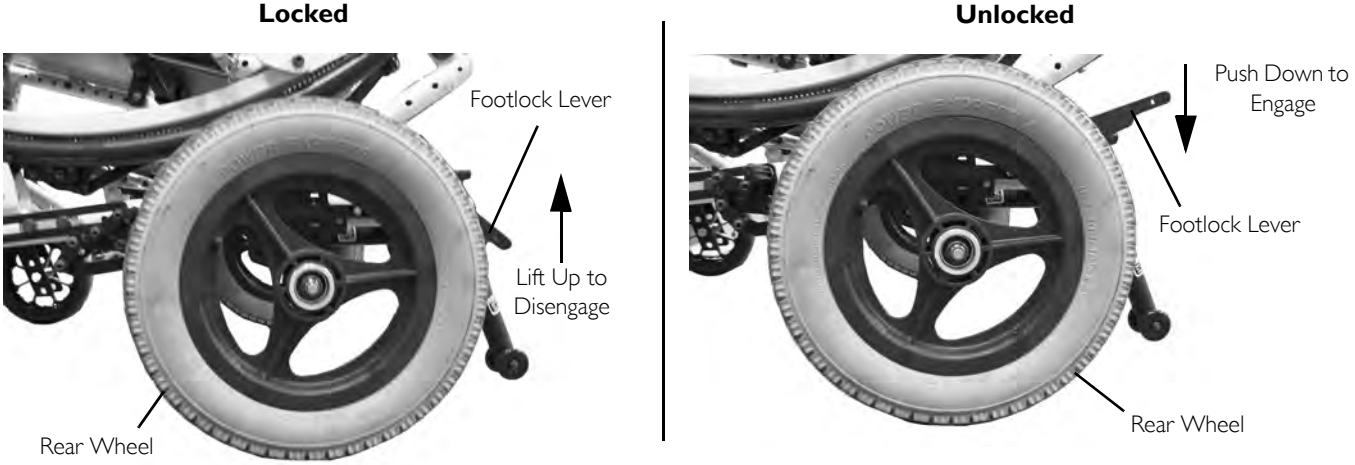

FIGURE 12 Using the Push to Lock Wheel Locks- Footlock

4.10 Operating Hublocks

WARNING

ALWAYS engage both hublocks and reduce the gap distance before transferring to and from the wheelchair. Turn all casters parallel to the object you are transferring onto.

Hublocks are not brakes. DO NOT attempt to stop a moving wheelchair with the hublocks.

Users should be evaluated by a care provider to determine the suitability of the hub lock option. Repetitive uncontrolled motion or spasms can result in damage to the hub lock system

Engaging the hublocks may not prevent the wheelchair from moving on all floor surfaces including those that may be wet or slick. ALWAYS exercise caution when transferring into or out of your wheelchair.

Always keep hands and fingers clear of moving parts to avoid injury.

If hublocks do not engage properly (wheels move while hublocks are locked) or do not disengage properly contact a qualified technician.

Patient Operated Hublock

1. Perform one of the following:
   - Engaging the Hublocks - Push hublock lever down to engage the hublocks
   - Disengaging the Hublocks - Pull hublock lever up to disengage the hublocks.

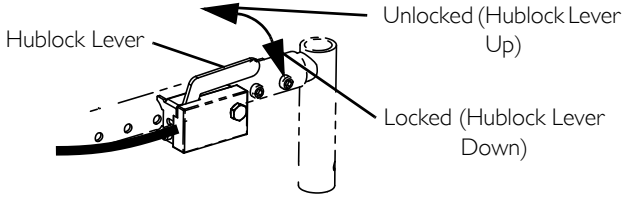

FIGURE 13 Patient Operated Hublock

Attendant Operated Hublock

1. Perform one of the following:
   - Engaging the Hublocks - Push hublock lever up to engage the hublocks
   - Disengaging the Hublocks - Pull hublock lever down to disengage the hublocks.

Foot Operated Hublock

1. Perform one of the following:
   - Engaging the Hublocks - Press hublock pedal down to engage the hublocks
   - Disengaging the Hublocks - Push hublock pedal up to disengage the hublocks.

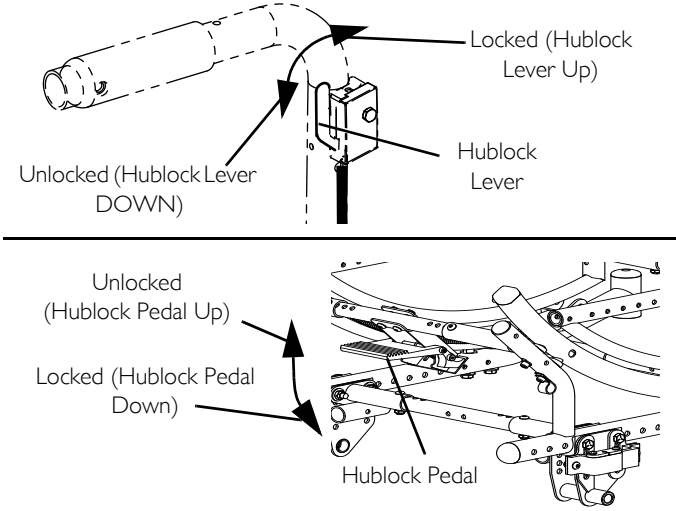

FIGURE 14 Attendant Operated Hublock/Foot Operated Hublock

4.11 Installing the Anti-Tippers

WARNING

Anti-tippers MUST be fully engaged and release buttons fully protruding out of the adjustment holes.

Ensure both anti-tippers are adjusted to the same mounting hole.

The manual wheelchair is intended for indoor and outdoor use on firm surfaces. When outdoors on wet, soft ground or on gravel surfaces, anti-tippers may not provide the same level of protection against tip over. DO NOT operate on soft surfaces such as sand, grass or gravel.

A 1 $^{1}/_{2}$ to 2 $^{1}/_{4}$ inch clearance between the bottom of the anti-tipper wheels and the floor MUST be maintained at all times.

1. Remove the anti-tippers from the accessory carton.
2. Press the release buttons in and install the anti-tippers with the wheels facing down until the locking buttons lock in place (FIGURE 15).
3. Adjust the anti-tippers. Refer to Adjusting the Anti-Tippers on page 70.

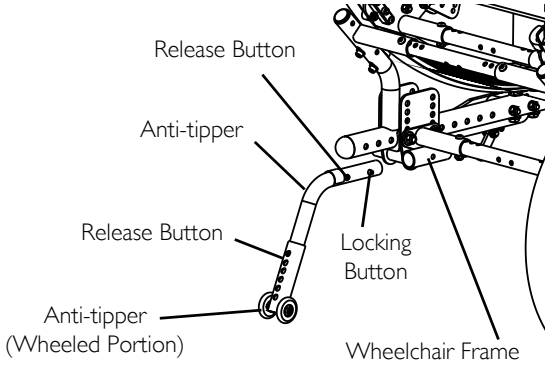

FIGURE 15 Installing the Anti-Tippers

4.12 Using the Adjustable Angle Stroller Handles

1. Press and hold in both buttons on the outside of the hinge arm of the stroller handle.
2. Adjust stroller handle to desired angle.
3. Release the buttons.
4. Push down on stroller handle to ensure hinge arms hold the desired position of the stroller handle.

There will be an audible click.

If hinge arms do not hold the position, contact Invacare technical support

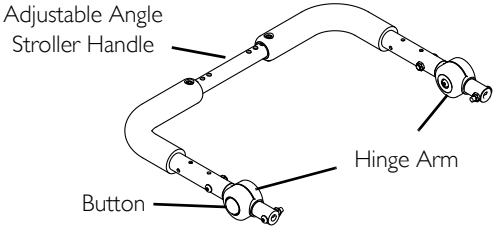

FIGURE 16 Using the Adjustable Angle Stroller Handles

4.13 Folding/Unfolding the Back Assembly

WARNING

The back MUST be locked securely in place before using the wheelchair.

1. Do one of the following:
   - Unfold - Push/pull the back towards rear of wheelchair until it locks in place.
   - Fold - Pick up on the back release levers and push the back towards the front of the wheelchair.

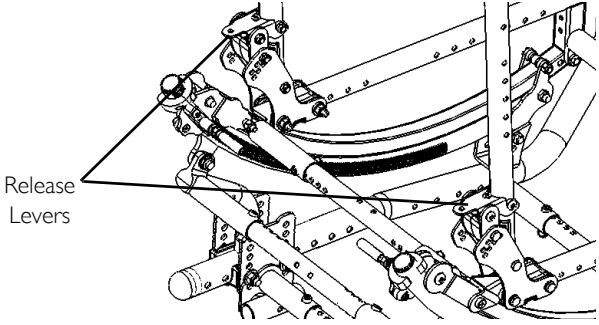

FIGURE 17 Folding/Unfolding the Back Assembly

4.14 Recliner Operation

WARNING

Both gas cylinders MUST be operational and adjusted properly before using the recliner. DO NOT operate the recliner option if only one of the gas cylinders is operational or adjusted properly.

ALWAYS make sure that the wheelchair is stable in the full reclined (back at 180°) position and the full upright (back at 90°) position before using the recliner option.

Make sure the patient is properly positioned in the wheelchair before reclining or inclining (sitting up) to maintain maximum stability and safety.

ALWAYS engage both wheel locks while reclining or inclining (sitting up) the wheelchair.

WARNING

When returning the occupant of the wheelchair to the full upright position, more body strength will be required for approximately the last twenty degrees of incline (sitting up). Make sure to use proper body mechanics (use your legs) or seek assistance to avoid injury.

Before using the recliner option, make sure the anti-tipper wheel assemblies are in the lowest adjustment hole (adjustment hole closest to the ground/floor).

Before using ANY recline position of this wheelchair, make sure the rear wheels are in the MOST REARWARD position to maintain the stability of the wheelchair. DO NOT change the handling/maneuverability of the wheelchair by moving the rear wheels to any of the forward positions. Moving the rear wheels to any of the forward positions will change the center of gravity of the wheelchair, making the wheelchair less stable.

ALWAYS return the back to the upright position before lifting the wheelchair.

Make sure occupant's hands and body are clear of all pinch points before reclining back. Pinch points exist between spreader bar and gas cylinders. Use caution, otherwise injury may occur.

1. Make sure the wheelchair is on a level surface.
2. Engage the wheel locks.
3. Inform the occupant of the wheelchair that the wheelchair is about to be reclined.
4. Make sure occupant's hands and body are clear of all pinch points.
5. Stand behind the wheelchair and grasp the adjustable angle stroller handle firmly.
6. Pull up on the trigger release levers to release the gas cylinders.
7. Slowly, squeeze the trigger release levers and perform one of the following:
   - Reclining - Allow the back to recline to the desired angle.
   - Returning to upright position - Pull up and push the stroller handle towards the front of the wheelchair until the back is in the upright position.
8. When the back reaches desired angle, slowly release the handles of the recliner cable assemblies.
9. Disengage the wheel locks.

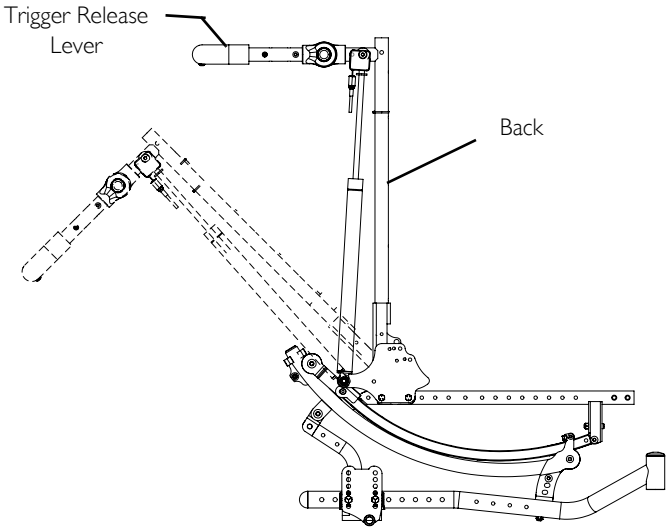

FIGURE 18 Recliner Operation

4.15 Engaging Tilt-In-Space

WARNING

The Invacare Solara wheelchair MUST be operated by an assistant when in ANY tilted position.

ALWAYS make sure that the wheelchair is stable before using the tilt-in-space. Rear wheels may have to be repositioned rearward depending on the degree of tilt-in-space required. ALWAYS ensure stability before using maximum amount of tilt-in-space. Test wheelchair before it is occupied by the end user to ensure safety.

DO NOT self propel wheelchair while in the tilted position.

Always engage both wheel locks while using the tilt-in-space.

To lower the seat parallel with the floor, reverse the following procedure..

1. Place the wheelchair on a level surface.
2. Engage both wheel locks.
3. Inform the occupant of the wheelchair that the wheelchair is about to be tilted and remind them to lean back.
4. Make sure the occupant's hands and body are clear of all pinch points.
5. Perform one of the following:
   A. For Hand Operated Tilt (Detail “A”):
      i. Stand behind the wheelchair and grasp both back canes firmly.
      ii. Pull up on the trigger release levers to release the tilt mechanism from the gear rack.
      iii. Slowly, push down on the back canes while pulling up on the trigger release levers in a continuous motion.
      iv. When the seat reaches the desired angle, slowly let go of the trigger release levers.
   B. For Foot Operated Tilt (Detail “B”):
      i. Push down on the foot lever to release the tilt mechanism from the gear rack.
      ii. Slowly, push down on the back canes while keeping the foot lever depressed.
      iii. When the seat reaches the desired angle, release the foot lever.

FIGURE 19 Engaging Tilt-In-Space

4.16 Installing/Removing Rear Wheels - Quick-Release

To remove rear wheels, reverse this procedure.

1. Push in the detent pin of the quick-release axle and insert the quick-release axle through the center of the rear wheel.
2. Push in the tip of the quick-release axle again and insert the axle (with wheel) into the axle mounting plate on the side of the wheelchair frame until the assembly locks in place.

WARNING

Make sure detent pin and locking pins of the quick-release axles are fully released before operating the wheelchair.

The locking pins MUST be protruding past the inside of the axle mounting plate for a positive lock.

Keep locking pins clean.

3. Ensure quick release axle locking pins are properly engaged and secure in the axle mounting plate by pulling the rear wheel away from the wheelchair frame. If the locking pins do not engage or there is too much movement of the rear wheel assembly in a back and forth position. Refer to Adjusting The Quick-Release Axle on page 71.
4. Repeat STEPS 1-3 for other rear wheel assembly.
5. Adjust the wheel locks. Refer to Wheel Lock Adjustment on page 118.

Only 12-inch rear wheel is shown. All other wheels will install/remove in the same manner.

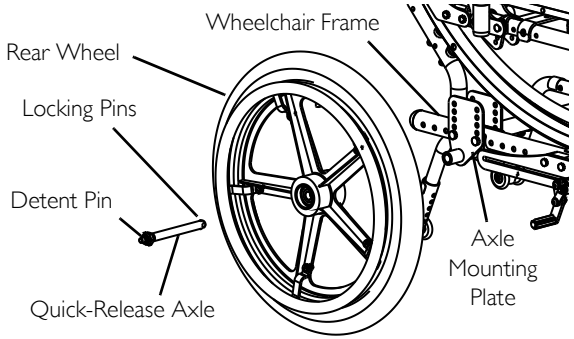

FIGURE 20 Installing/Removing Rear Wheels - Quick-Release

5 Transport Ready Option

WARNING

Contact Invacare Corporation with any questions about using this wheelchair for seating in a motor vehicle.

When feasible, wheelchair occupants should transfer into the vehicle seat and use the OEM (Original Equipment Manufacturer) vehicle-installed restraint system.

This wheelchair has been dynamically tested in a forward-facing mode with the specified crash test dummy restrained by BOTH pelvic and upper-torso belt(s) (shoulder belts), and that BOTH pelvic and upper torso belt(s) should be used to reduce the possibility of head and chest impacts with vehicle components.

Use ONLY Wheelchair Tie-down and Occupant Restraint Systems (WTORS) which meet the requirements of the SAE (Society of Automotive Engineers) J2249 Recommended Practice during travel in a motor vehicle.

This wheelchair has been tested for seating in a motor vehicle with the factory installed seating system only.

This wheelchair MUST be in a forward facing position during travel in a motor vehicle.

This wheelchair is equipped, and has been dynamically tested to rely on WHEELCHAIR-ANCHORED pelvic belts. If desired, VEHICLE-ANCHORED pelvic belts may be used.

IT IS STRONGLY RECOMMENDED THAT BOTH PELVIC AND UPPER-TORSO BELT(S) BE USED TO REDUCE THE RISK OF INJURY.

To reduce the potential of injury to vehicle occupants, wheelchair-mounted accessories, including but not limited to IV poles, trays, respiratory equipment, backpacks, and other personal items should be removed and secured separately.

Postural supports, positioning devices, and/or strap(s) should NOT be relied on for occupant restraint. These items may be used IN ADDITION TO the wheelchair-anchored or vehicle-anchored belts.

Ensure quick-release pins are engaged through bearing housings and tilt slides.

DO NOT alter or substitute wheelchair frame parts, components, or seating systems.

5 TRANSPORT READY OPTION

WARNING

A sudden stop and/or collision may structurally damage your wheelchair. Wheelchairs involved in such incidents should be replaced.

Only use the transport brackets included with TRRO and TRBKTS for the purposes described in this manual.

5.1 About Transport Ready Packages

TRRO includes four factory-installed transport brackets and a wheelchair anchored pelvic belt. TRRO has been crash-tested in accordance with ANSI/RESNA WC Vol 1 Section 19 Frontal Impact Test requirements for wheelchairs with a 168 lb crash dummy, which corresponds to a person with a weight of 114 to 209 lbs.

TRBKTS includes four factory-installed wheelchair transport brackets. TRBKTS has not been crash-tested in accordance with WC 19. Invacare recommends that these transport brackets be used only to secure an unoccupied wheelchair during transport.

As of this date, the Department of Transportation has not approved any tie-down systems for transportation of a user while in a wheelchair, in a moving vehicle of any type. It is Invacare's position that users of wheelchairs should be transferred into appropriate seating in vehicles for transportation and use be made of the restraints made available by the auto industry. Invacare cannot and does not recommend any wheelchair transportation system.

5.2 Compliance Information

This wheelchair conforms with the requirements of the ANSI/RESNA WC/Vol. 1 - Section 19 (Frontal Impact Test)

ANSI = American National Standards Institute, RESNA= Rehabilitation Engineering and Assistive Technology Society of North America.

This wheelchair has been dynamically tested in a forward-facing mode with the specified crash test dummy, which corresponds to a person **with a weight of 114-209 pounds**, restrained by BOTH pelvic and shoulder belts in accordance with ANSI/RESNA WC Vol 1 Section 19. BOTH pelvic and upper torso belts should be used to reduce the possibility of head and chest impacts with vehicle components.

5.3 Specifications

Only wheelchairs which fit in the following size ranges should be occupied in a motor vehicle:12 to 22 inches wide and 12 to 22 inches deep

Weight Limit - Solara 3G up to 300 pounds; Solara 3G with Heavy Duty Package up to 400 pounds.

5.4 Securing the Wheelchair to the Vehicle

Positioning the Wheelchair in the Vehicle

WARNING

This wheelchair MUST be in a forward facing position during travel in a motor vehicle.

The recommended clear zones for wheelchair seated occupants restrained by BOTH pelvic and upper torso belt(s) and ONLY by a pelvic belt are shown in the diagrams and described below.

Frontal Clear Zones (FCZ) need to be LARGER when upper torso belt(s) are NOT used.

The rear clear zone of 16-inches is measured from the rearmost point on an occupant's head.

The frontal clear zone is measured from the frontmost point on an occupant's head and is 26-inches with pelvic and upper-torso belt(s) and 37-inches with ONLY a pelvic belt.

The frontal clear zone may not be achievable for wheelchair-seated drivers.

The estimated seated height (HHT) from the ground or floor to the top of the wheelchair-seated occupant's head ranges from approximately 47-inches for a small adult female to about 61-inches for a tall adult male

Side View

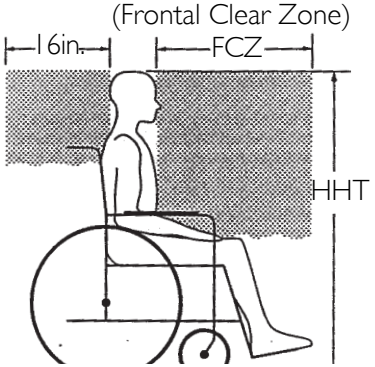

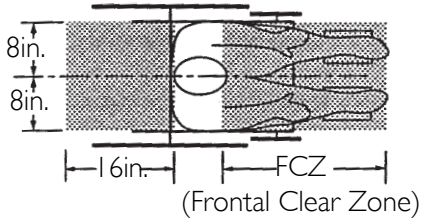

Top View

5 TRANSPORT READY OPTION

Securement Points

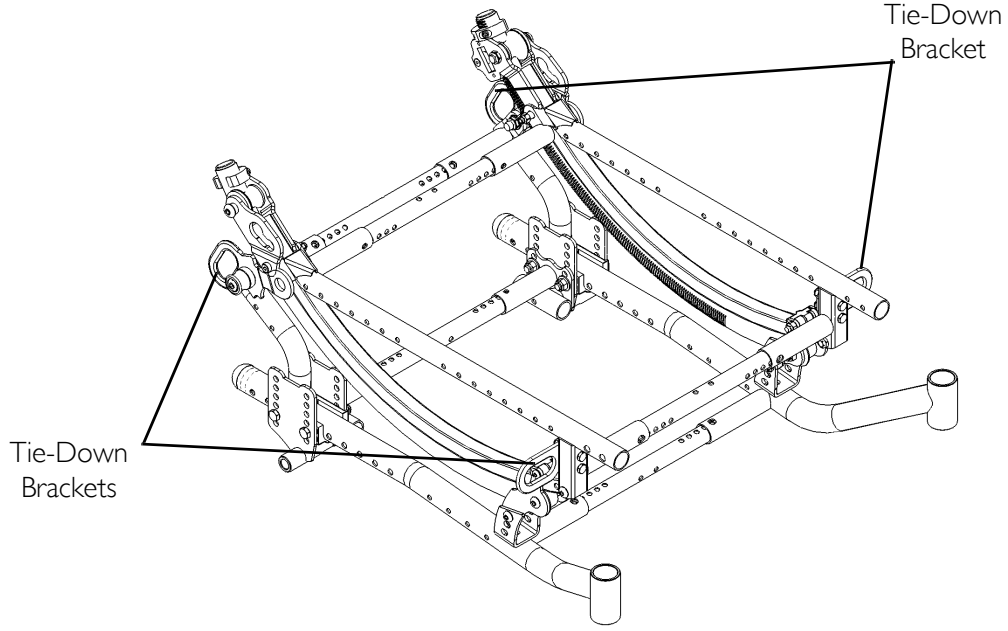

FIGURE 1 Securement Points

Securing the Wheelchair

This wheelchair is to be used only with Wheelchair Tie-down and Occupant Restraint Systems (WTORS) that have been installed in accordance with the manufacturer's instructions and SAE J2249.

A copy of SAE J2249 Wheelchair Tie-down and Occupant Restraint Systems (WTORS) for use in Motor Vehicles can be obtained from: SAE International, 400 Commonwealth Drive, Warrendale, PA 15096-0001, (877) 606-7232 or (724) 776-4970.

Attach WTORS to the tie-down brackets in accordance with the manufacturer's instructions and SAE J2249.

Tilt Lock Out

1. Tilt wheelchair until horizontal lines on tilt angle indicator are aligned with the dot on the rocker tube. Refer to Engaging Tilt-In-Space on page 54 and Detail “A” in FIGURE 3.
2. Pull release barrel out (Detail “B”).
3. Rotate tie down bracket counterclockwise.
4. Position mounting hole in tie down bracket on anchor pin (Detail “C”).
5. Repeat STEPS 2-4 for remaining tie down bracket.

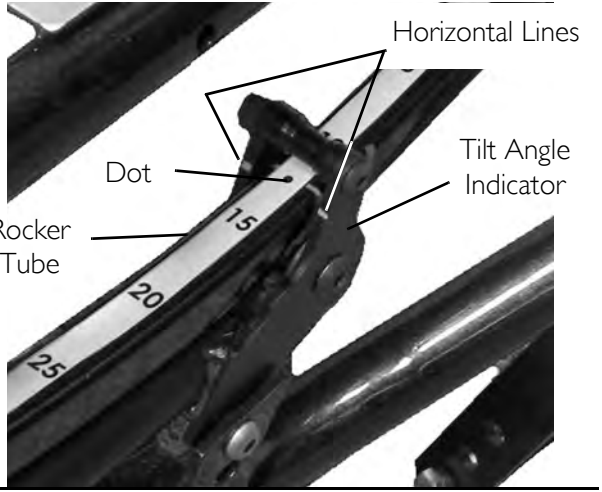

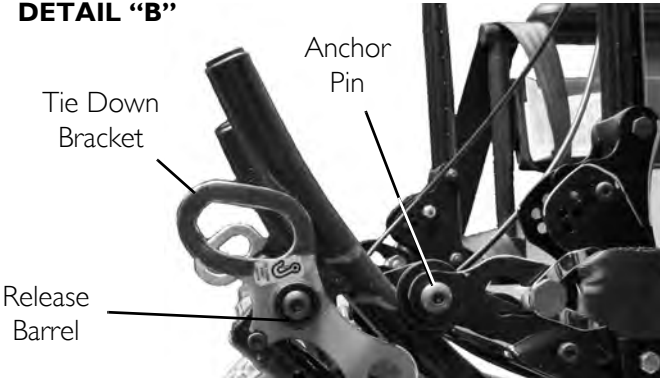

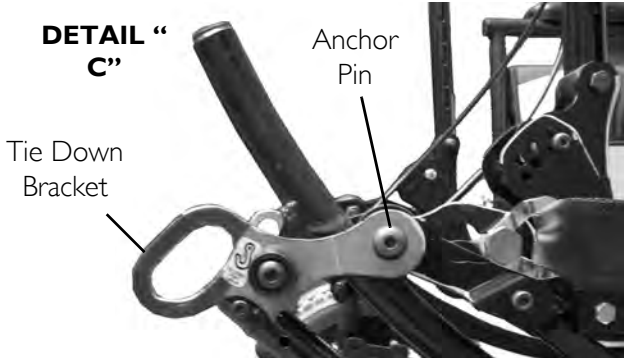

FIGURE 2 Tilt Lock Out

5.5 Securing the Occupant

Wheelchair-Anchored Belts

WARNING

The pelvic belt that is provided by Invacare has been tested for use in a motor vehicle on this wheelchair only. DO NOT replace the pelvic belt with a different style pelvic belt.

The wheelchair has been provided with a pelvic belt which meets the requirements of ANSI/RESNA WC/19.

The pelvic belt provided by Invacare has been designed to accommodate use on either side of the vehicle. If necessary, follow the instructions below to reverse the orientation of the pelvic belt to accommodate the vehicle-anchored upper torso belt.

1. Install the pelvic belt pin (Detail "A" of FIGURE 3) into slot in the pelvic belt bracket. Pull upwards until it snaps into place.

Note the position of the male end of the belt when installing the pelvic belt onto the pelvic belt brackets. The male end of the pelvic belt (Detail "A" of FIGURE 3) has a pin which is used to secure the vehicle-anchored upper torso belt.

2. Repeat STEP 1 for the opposite pelvic belt bracket.
3. Install the vehicle-anchored upper torso belt onto the pin on the male end of the pelvic belt.

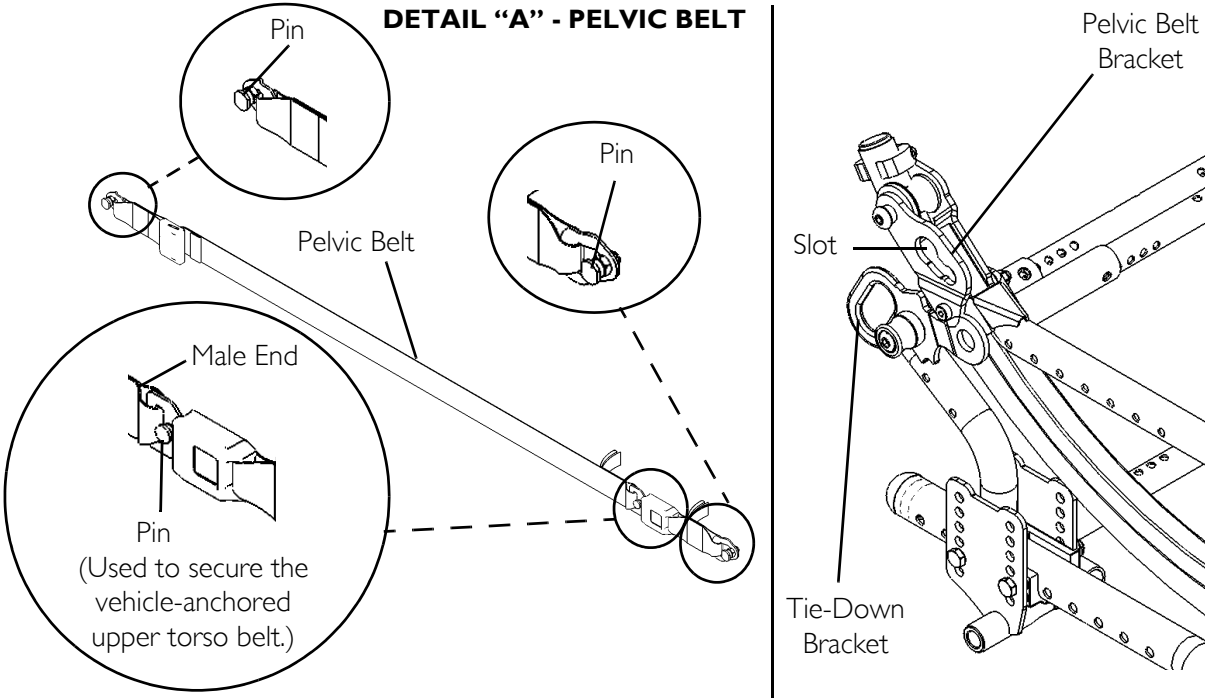

FIGURE 3 Wheelchair-Anchored Belts

Vehicle-Anchored Belts

This wheelchair has an overall rating of "B" with regard to accommodating the use and fit of vehicle-anchored belts. This rating is scored as follows:

RATING	DESCRIPTION
A	Excellent
B	Good
C	Fair
D	Poor

The test for Lateral Stability Displacement for Point (P) is shown in FIGURE 4. The average test result for point (P) is 0.65-inches (16.5 mm).

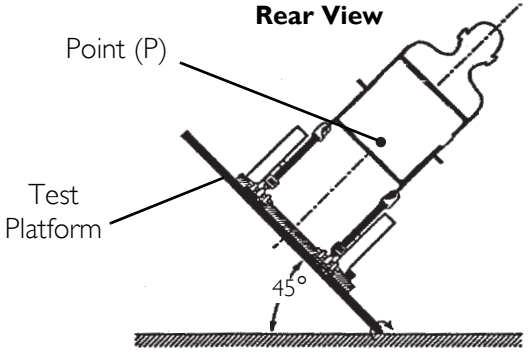

NOTE: Rear view of wheelchair and human surrogate secured on test platform and tilted to 45 degrees.

FIGURE 4 Vehicle-Anchored Belts

5 TRANSPORT READY OPTION

Seating System

WARNING

This wheelchair has been tested for seating in a motor vehicle with the factory installed seating system only.

When feasible, wheelchair occupants should transfer into the vehicle seat and use the OEM (Original Equipment Manufacturer) vehicle-installed restraint system

Ensure that the factory installed seating system is secured to the wheelchair frame before operation. Refer to the seating system owner's manual.

Positioning Belts

WARNING

The angle of the pelvic belt should be within the preferred zone of 45 to 75 degrees to the horizontal OR within the optional zone of 30 to 45 degrees to the horizontal.

Steeper side-view pelvic belt angles are especially important if the pelvic belt is intended to be used for postural support in addition to occupant restraint in a frontal crash. Steeper angles will reduce the tendency for a vertical gap to develop between the user and the belt due to compliance of seat cushions and belt movement, thereby reducing the tendency for the user to slip under the belt and for the belt to ride up on the soft abdomen during normal use

Steeper belt angles also reduce the tendency for upper-torso belts to pull the pelvic belt onto the abdomen during frontal impact loading.

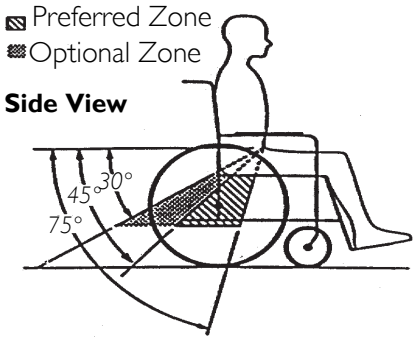

1. The pelvic belt should be worn low across the front of the pelvis.
2. Position the upper torso belt(s) over the shoulders.
3. The belt(s) should not be held away from the body by wheelchair components or parts, including but not limited to wheelchair armrests or wheels. Refer to FIGURE 5 for proper and improper positioning of the belts.
4. Ensure the belt(s) are not be twisted.
5. Adjust belts as firmly as possible, being mindful of user comfort.

DO position belts INSIDE of armrests, wheels, etc.

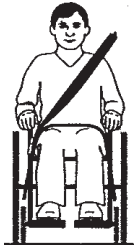

DO NOT position belts OUTSIDE of armrests, wheels, etc.

FIGURE 5 Positioning Belts

6 Adjustment

WARNING

After any adjustments, repair or service and before use, make sure all attaching hardware is tightened securely - otherwise injury or damage may occur.

6.1 Adjusting the Height of the Adjustable Height Armrests

1. Unlock the armrest assembly by flipping the armrest release lever on the top front of the arm to the up (horizontal) position (Detail "A").
2. Adjust armrest assembly to desired height.
3. Lock the armrest assembly by pressing the release lever into the down (vertical) position (Detail "A").
4. Pull up on the armrest assembly to ensure the armrest is locked in place.
5. Repeat STEPS 1-4 for opposite side of wheelchair, if necessary.

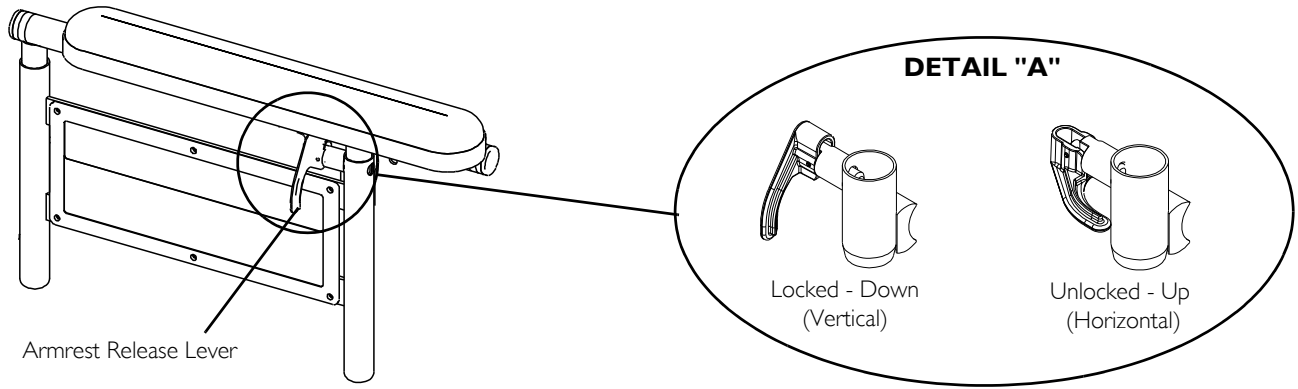

FIGURE 1 Adjusting the Height of the Adjustable Height Armrests

6.2 Adjusting T-Arm Height

1. Unlock the T-Arm by flipping the T-Arm release lever towards the inside of the wheelchair..

   If necessary, pull the T-Arm release lever out and rotate 180° so it can be flipped towards the outside of the wheelchair.

2. Slide the T-Arm to one of:
   - Low Height T-Arms - Nine positions.
   - High Height T-Arms - Seven positions.

   If the inside T-Arm post does not slide up and down in the outside T-Arm post as desired, contact a qualified technician/dealer.

3. Lock the T-Arm by flipping the T-Arm release lever towards the front of the wheelchair.

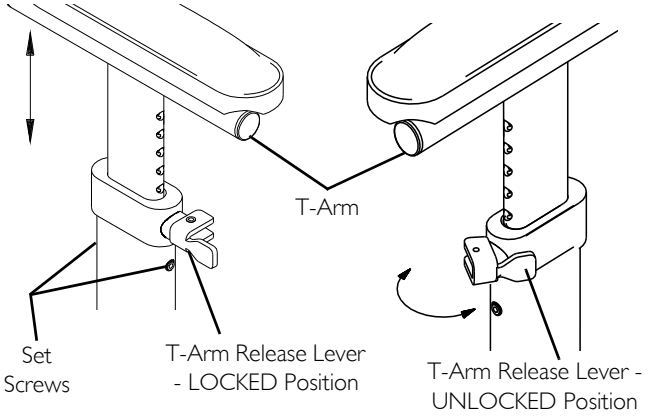

FIGURE 2 Adjusting T-Arm Height

6 ADJUSTMENT

6.3 Adjusting the Anti-Tippers

1. Depress the release button on the wheeled portion of the anti-tipper and slide it up/down to achieve 1 $^{1}/_{2}$ to 2 $^{1}/_{4}$ inch clearance.

WARNING

Anti-tippers MUST be fully engaged and release buttons fully protruding out of same respective adjustment holes BEFORE use. This will avoid a 3-Wheeling situation..

2. Ensure that the release buttons are fully engaged in the adjustment holes and 1 $^{1}/_{2}$ to 2 $^{1}/_{4}$ inch clearance is maintained.
3. If a 1 $^{1}/_{2}$ to 2 $^{1}/_{4}$ inch clearance cannot be obtained, contact a qualified technician.
4. Repeat STEPS 1-3 for opposite side.

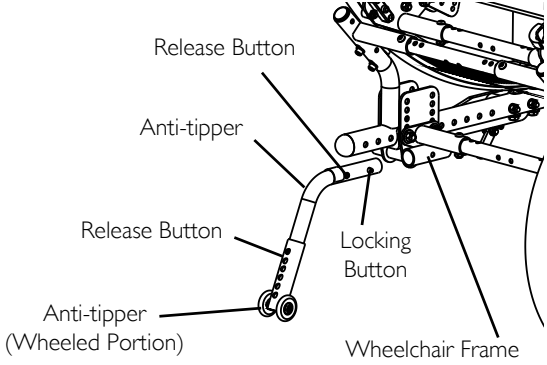

FIGURE 3 Adjusting the Anti-Tippers

6.4 Adjusting The Quick-Release Axle

1. Remove rear wheel and quick-release axle from the wheelchair. Refer to Installing/Removing Rear Wheels - Quick-Release on page 56.
2. Depress detent pin in the quick-release axle and slide axle through the wheel hub.
3. Increase or decrease end play in the quick release axle by adjusting the locknut on the end of the quick-release axle.
4. Reinstall rear wheel onto the wheelchair. Refer to Installing/Removing Rear Wheels - Quick-Release on page 56.
5. Release detent pin ensuring that the locking pins are fully released.
6. Repeat STEPS 3-5 until the quick-release axle locks properly.
7. Repeat STEPS 1-6 for opposite side, if necessary.

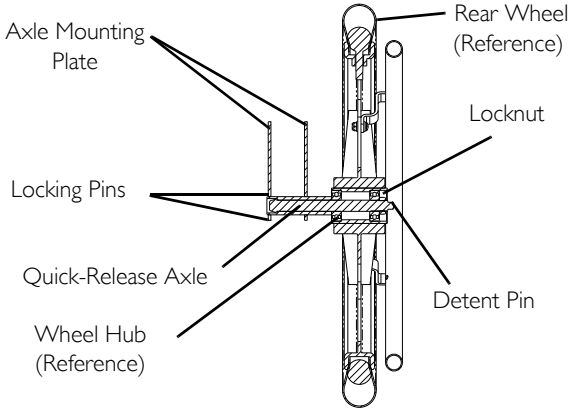

FIGURE 4 Adjusting The Quick-Release Axle

7 Transporting

7.1 Transporting

1. Remove the seating system. Refer to the seating system Owner's Manual for installation and removal of the seating system.
2. Remove the footrests. Refer to Installing/Removing Footrests on page 36 or Installing Impact Guards/Calf Strap/H-Calf Strap on page 38.
3. Remove the rear wheels(guick release axels only). Refer to Installing/Removing Rear Wheels - Quick-Release on page 56.
4. Remove the armrests. Refer to Installing/Removing Dual Point Armrests (Fixed And Adjustable Height) on page 38 or Installing/Removing T-Arms on page 42.
5. Remove the stroller handle (if applicable). Refer to Installing/Removing Non-Adjustable Stroller Handles on page 103.
6. Pick up on the back release levers and push the back towards the front of the wheelchair. Refer to Folding/Unfolding the Back Assembly on page 51.

8 Safety Inspection/Maintenance

ⓘ Every six months take your wheelchair to a qualified technician for a thorough inspection and servicing. Regular cleaning will reveal loose or worn parts and enhance the smooth operation of your wheelchair. To operate properly and safely, your wheelchair MUST be cared for just like any other vehicle. Routine maintenance will extend the life and efficiency of your wheelchair.

8.1 Safety Inspection Checklists

Initial adjustments should be made to suit your personal body structure needs and preference. Thereafter follow these maintenance procedures:

Inspect/Adjust Initially

- ❑ Ensure wheelchair rolls straight (no excessive drag or pull to one side).
- ❑ Inspect clothing guards for bent or protruding metal.
- ❑ Ensure that all fasteners on clothing guards are secure.
- ❑ Ensure arms are secure but easy to release and adjustment levers engage properly.
- ❑ Ensure adjustable height arms operate and lock securely.
- ❑ Ensure armrest upholstery has no rips.
- ❑ Ensure armrest pad sits flush against arm tube.
- ❑ Ensure hand grips are not loose.
- ❑ Ensure seat, back and/or arm upholstery have no rips.
- ❑ Ensure trigger release lever cables and handles return when released.
- ❑ Inspect handrims for signs of rough edges or peeling finish.
- ❑ Ensure there is no excessive side movement or binding when drive wheels are lifted and spun.
- ❑ Ensure sealed bearings and axle nut tension are correct.
- ❑ Adjust bearing system if wheel wobbles noticeably or binds to a stop.
- ❑ Ensure wheel/fork assembly has proper tension when caster is spun. Caster should come to a gradual stop.
- ❑ Loosen/tighten caster locknut if wheel wobbles noticeably or binds to a stop.
- ❑ Ensure all caster/wheel/fork/headtube fasteners are secure.
- ❑ Ensure that casters are free of debris.

8 SAFETY INSPECTION/MAINTENANCE

- ❑ Ensure wheel locks DO NOT interfere with tires when rolling.
- ❑ Ensure wheel lock pivot points are free of wear and looseness.
- ❑ Ensure wheel locks are easy to engage.
- ❑ Inspect tires for flat spots and wear.

Check pneumatic tires for proper inflation.

CAUTION

As with any vehicle, the wheels and tires should be checked periodically for cracks and wear, and should be replaced.

- ❑ Check that all labels are present and legible. Replace if necessary.

Inspect/Adjust Weekly

- ❑ Ensure wheelchair rolls straight (no excessive drag or pull to one side).
- ❑ Ensure hand grips are not loose.
- ❑ Ensure wheel/fork assembly has proper tension when caster is spun. Caster should come to a gradual stop.
- ❑ Ensure all caster/wheel/fork/headtube fasteners are secure.
- ❑ Ensure that casters are free of debris.
- ❑ Check pneumatic tires for proper inflation.

Inspect/Adjust Monthly

- ❑ Ensure sealed bearings and axle nut tension are correct..
- ❑ Ensure there is no excessive side movement or binding when drive wheels are lifted and spun.
- ❑ Adjust bearing system if wheel wobbles noticeably or binds to a stop.
- ❑ Inspect tires for flat spots and wear.
- ❑ Ensure wheel locks DO NOT interfere with tires when rolling.
- ❑ Ensure wheel lock pivot points are free of wear and looseness.
- ❑ Ensure wheel locks are easy to engage.
- ❑ Inspect axles to ensure they are free from dirt, lint, etc.

- ❑ Inspect tilt slides and roller bearings to ensure they are free from dirt, lint, etc.
- ❑ Inspect seat positioning strap for any signs of wear. Ensure buckle latches. Verify hardware that attaches strap to frame is secure and undamaged. Replace if necessary.

Inspect/Adjust Periodically

- ❑ Inspect clothing guards for bent or protruding metal.
- ❑ Ensure that all fasteners on clothing guards are secure.
- ❑ Ensure arms are secure but easy to release and adjustment levers engage properly.
- ❑ Ensure that casters are free of debris.
- ❑ Ensure adjustable height arms operate and lock securely.
- ❑ Ensure armrest upholstery has no rips.
- ❑ Ensure armrest pad sits flush against arm tube.
- ❑ Ensure trigger release lever cables and handles return when released.
- ❑ Ensure sealed bearings and axle nut tension are correct.
- ❑ Inspect handrims for signs of rough edges or peeling finish.
- ❑ Ensure seat, back and/or arm upholstery have no rips.

CAUTION

Damage from Bleach

Clean upholstery with mild soap and water or spray disinfectant using a sponge. DO NOT use bleach or wash in a washing machine.

- ❑ Clean upholstery and armrests.
- ❑ Clean and wax all parts.
- ❑ Check that all labels are present and legible. Replace if necessary.

8.2 Troubleshooting - Mechanical

CHAIR VEERS LEFT/RIGHT	SLUGGISH TURN/ PERFORMANCE	CASTERS FLUTTER	SQUEAKS AND RATTLES	LOOSENESS IN CHAIR	SOLUTIONS
X	X				If pneumatic tires, check for correct and equal pressure.
	X	X	X	X	Check for loose stem nuts/bolts.
X		X			Check that casters contact ground at the same time.

8.3 Maintenance Safety Precautions

WARNING

After any adjustments, repair or service and before use, make sure all attaching hardware is tightened securely - otherwise injury or damage may result.

Replace any labels that are missing, worn, or torn. Refer to Label Locations on page 10 for a listing of the labels and their locations

CAUTION

DO NOT overtighten hardware attaching to the frame. This could cause damage to the frame tubing.

8.4 Suggested Maintenance Procedures

1. Before using your wheelchair, make sure all nuts and bolts are tight.
2. Check all parts for damage or wear and replace.

3. Check all parts for proper adjustment.
4. Keep quick-release axles free of dirt and lint to ensure positive locking and proper operation. Refer to Adjusting The Quick-Release Axle on page 71.

WARNING

DO NOT use WD-40®, 3-in-1 oil®, or other penetrating lubricants on quick-release axles. Otherwise, binding and/or damage to the wheelchair may occur.

5. Clean quick-release axles once a week with a Teflon® lubricant.

WARNING

DO NOT use your wheelchair unless it has the proper tire pressure (p.s.i.).

DO NOT overinflate the tires. Failure to follow these suggestions may cause the tire to explode and cause bodily harm. The recommended tire pressure is listed on the side wall of the tire.

CAUTION

As with any vehicle, the wheels, casters and tires should be checked periodically for cracks and wear, and should be replaced.

6. Periodically adjust wheel locks in correlation to tire wear. Refer to Wheel Lock Adjustment on page 118.

Tire wear is excessive if:

- Pneumatic Tires - there is missing tread or the tires are bald.
- Urethane Tires - there are cuts, surface defects or the tires are loose on the rims.
- Rubber Tires - 30% or more of the tire has worn away.

Invacare recommends that rear wheel tire/tube and caster tire/tube be replaced every five years.

7. Periodically check handrims to ensure they are secured to the rear wheels.
8. Keep tilt slides and roller bearings free of dirt and lint to ensure proper operation of the tilt mechanism.

9. Periodically check the back fold down mechanisms to ensure that they lock the back securely in place.
10. Periodically check front caster wheel bearings to make sure they are clean and free from moisture. Use a Teflon® lubricant if necessary.
11. Check upholstery for sagging, rips or tears.
12. Clean upholstery with mild soap and water.
13. Recliners Only - Periodically check gas cylinders for oil leaks. If oil leak is detected, contact Invacare.

Replacing/Repairing Rear Wheel Tire/Tube

WARNING

Replacement of solid urethane tires is not recommended. If the solid urethane tire needs repaired, Invacare recommends replacing the complete wheel assembly.

Replacement of rear wheel tube must be performed by a qualified technician.

Replacing/Repairing Caster Tire/Tube

WARNING

Replacement of solid urethane or semi-pneumatic tires is not recommended. If the solid urethane or semi-pneumatic tires need replaced, Invacare recommends replacing complete caster assembly.

For pneumatic tires, replacement of the tube must be performed by a qualified technician.

8.5 Cleaning Instructions

CAUTION

Risk of Damage

Spraying the wheelchair with water or any type of liquid may permanently damage the electronics such as ventilators and communication devices.

– NEVER spray the wheelchair with any type of water or liquid.

Regular cleaning will reveal loose or worn parts and enhance the smooth operation of your wheelchair. To operate properly and safely, your wheelchair must be cared for just like any other vehicle.

For upholstery that is severely stained or surface finish that is badly damaged, contact the seating system manufacturer for further information.

Cleaning Upholstery, Cloth, Vinyl

For cleaning upholstery, refer to the seating user manual shipped with the product.

Cleaning Metal Surfaces

Hot water and a mild detergent on soft cloth should be used for cleaning metal surfaces. Wipe down with damp cloth. Dry surface by wiping down with dry cloth.

Car polish and soft wax can be used to remove abrasions and restore gloss (Follow manufacturer's instructions).

Cleaning Plastic Surfaces

Plastic surfaces should be cleaned with soft cloth, mild detergent, and hot water. Rinse surface with clean water. Dry surface with soft cloth. Solvents or kitchen cleaners must not be used on plastic surfaces.

9 Service

! IMPORTANT

The following sections of the user manual provides adjustment and service instructions for this product. All procedures in these sections MUST be performed by a qualified technician/dealer.

For any service requirements beyond these procedures contact Invacare.

For a list of parts or part numbers contact your dealer/Invacare.

DO NOT return product without first contacting your dealer/Invacare for shipping and packing instructions.

If necessary, contact Invacare for a list of dealers.

⚠ DANGER

Risk of Death, Serious Injury or Damage

Use of incorrect or improper replacement (service) parts may cause death, serious injury, or damage.

Replacement parts MUST match original Invacare parts.

ALWAYS provide the wheelchair serial number to assist in ordering the correct replacement parts.

⚠ WARNING

Risk of Serious Injury

A non-qualified technician performing service procedures on this wheelchair can result in serious injury.

A qualified technician MUST perform all procedures in this section of the manual.

⚠ WARNING

Unless otherwise noted, all service and adjustment should be performed while the wheelchair is unoccupied.

After ANY adjustments, repair or service and BEFORE use, make sure all attaching hardware is tightened securely - otherwise injury or damage may result.

TOOLS: Performing procedures in this section may require the use of tools including:

Flat blade and philips head screwdrivers, standard and or metric socket set/wrenches, torque wrench, hex (Allen) keys and side cutters.

9.1 Set up Inspection Checklists

Initial adjustments should be made to suit your personal body structure needs and preference.

- ❑ Ensure wheelchair rolls straight (no excessive drag or pull to one side).
- ❑ Inspect clothing guards for bent or protruding metal.
- ❑ Ensure that all fasteners on clothing guards are secure.
- ❑ Ensure arms are secure but easy to release and adjustment levers engage properly.
- ❑ Ensure adjustable height arms operate and lock securely.
- ❑ Ensure armrest upholstery has no rips.
- ❑ Ensure armrest pad sits flush against arm tube.
- ❑ Ensure hand grips are not loose.
- ❑ Ensure seat, back and/or arm upholstery have no rips.
- ❑ Ensure trigger release lever cables and handles return when released.
- ❑ Inspect handrims for signs of rough edges or peeling finish.
- ❑ Ensure there is no excessive side movement or binding when drive wheels are lifted and spun.
- ❑ Ensure sealed bearings and axle nut tension are correct.
- ❑ Adjust bearing system if wheel wobbles noticeably or binds to a stop.
- ❑ Ensure wheel/fork assembly has proper tension when caster is spun. Caster should come to a gradual stop.
- ❑ Loosen/tighten caster locknut if wheel wobbles noticeably or binds to a stop.
- ❑ Ensure all caster/wheel/fork/headtube fasteners are secure.
- ❑ Ensure that casters are free of debris.
- ❑ Ensure wheel locks DO NOT interfere with tires when rolling.
- ❑ Ensure wheel lock pivot points are free of wear and looseness.
- ❑ Ensure wheel locks are easy to engage.
- ❑ Inspect tires for flat spots and wear.
- ❑ Check pneumatic tires for proper inflation.
- ❑ Check that all labels are present and legible. Replace if necessary.

10 Front Riggings

WARNING

After any adjustments, repair or service and before use, make sure all attaching hardware is tightened securely - otherwise injury or damage may occur

10.1 Adjusting Footrest Height

Height Adjustment Ranges

60° footrest - Range:13-17 inches, 70° footrest - Range:13-17 inches, 90° footrest - Range: 5-8 inches, 90° footrest - 5-11 inches (with 3 inch extension)

If using ANY type of extension with the adjustable flip-up footplate. Refer to Adjusting Adjustable Angle Flip-Up Footplates on page 85.

60°, 70° and 70° Taper

1. Remove the footrest from the wheelchair. Refer to Installing/ Removing Footrests on page 36.
2. Remove the hex screw and coved spacer and slide the footrest up or down on its mounting tube until the desired footrest height is achieved.
3. Reassemble the hex screw and coved spacer through the footrest upper support and mounting tube.
4. Securely tighten the hex screw and coved spacer.
5. Install the footrest assembly onto the wheelchair. Refer to Installing/Removing Footrests on page 36.
6. Repeat STEPS 1-5 for the opposite side of the wheelchair, if necessary.

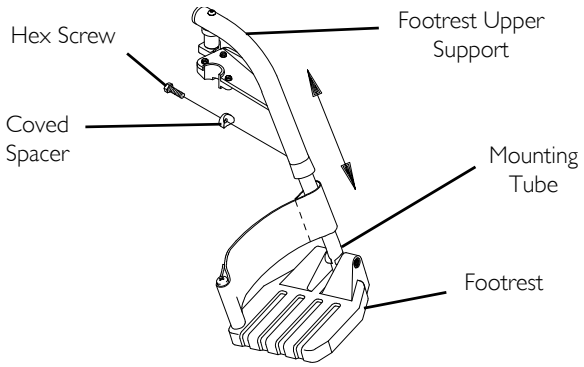

FIGURE 1 Adjusting Footrest Height - 60°, 70° and 70° Taper

70° MFX, 90°, 70° LIFT and 90° LIFT Footrests.

1. Remove any accessories that are attached to the footrests.
2. Remove the socket bolt, coved washer and locknut that secure the footplate to the footrest support.
3. Reposition the footplate to the desired height.
4. Reinstall the socket bolt through the mounting holes of the footplate and footrest support.

WARNING

DO NOT overtighten socket bolt and locknut. Footrest MUST be able to rotate upward from the horizontal to the vertical position.

5. Secure the footplate to the footrest support with the coved washer and locknut.

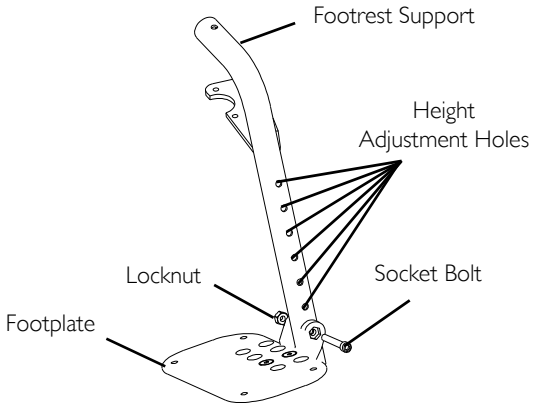

FIGURE 2 Adjusting Footrest Height - 70° MFX, 90°, 70° LIFT and 90° LIFT Footrests.

10.2 Installing Adjustable Angle Flip-Up Footplate Hinge

1. Position the adjustable angle flip-up footplate hinge on the footrest support tube at the desired height.
2. Position the hardware on the footrest support as shown in FIGURE 2.
3. Flip the footplate hinge to the up position.
4. The footplate hinge will fall to the down position.
5. Tighten the socket screw and locknut that secure the footplate hinge to the footrest support until the footplate hinge remains in the up position.
6. Check the up and down motion of the footplate hinge to make sure the user of the wheelchair can operate the footplates easily.
7. If the footplate's motion is:
   - too tight, loosen the socket screw and locknut approximately $^{1}/_{4}$ turn.
   - too loose, tighten the socket screw and locknut approximately $^{1}/_{4}$ turn.

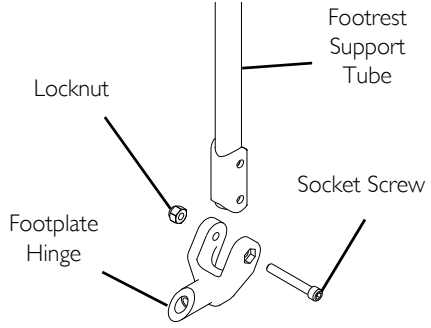

FIGURE 3 Installing Adjustable Angle Flip-Up Footplate Hinge

10.3 Adjusting Adjustable Angle Flip-Up Footplates

WARNING

When determining the angle of the footplates, make sure the rear of the footplates DO NOT interfere with the movement of the front casters. Otherwise, injury or damage may occur.

Depth Adjustment

1. Remove the two flat screws and locknuts that secure footplate to the half clamp.

   Observe the angle of the footplate for reinstallation.

2. Move the footplate to one of four mounting positions.

   If desired depth is still not obtained, rotate the half clamp on the footplate hinge 180°.

3. Retighten the two flat screws and locknuts.

   The setting for positioning the footplate on the half clamp may vary for each footplate.

4. Repeat STEPS 1-3 for opposite footplate, if desired.

Angle Adjustment

1. Loosen, but DO NOT remove the adjustment screw in the half clamp.
2. Position the footplate to the necessary angle to accommodate the user (Detail "A").
3. Retighten the adjustment screw. Torque to over 90 in-lbs, but no more than 300 in-lbs.
4. Repeat STEPS 1-3 for opposite footplate, if desired.
5. Screw in or out until the adjustable angle flip-up footplate is perpendicular to the footrest assembly or the desired inversion/eversion is obtained.

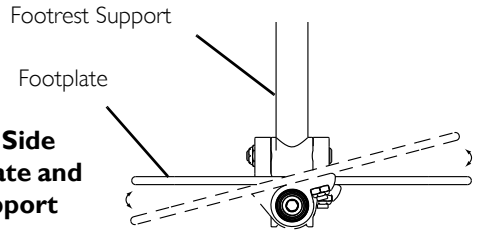

Detail "A" - Side View of Footplate and Footrest Support

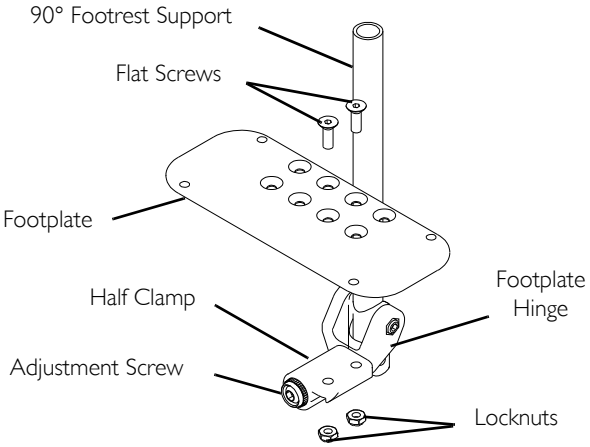

FIGURE 4 Adjusting Adjustable Angle Flip-Up Footplates

10.4 Raising/Lowering the Elevating Legrest

1. Perform one of the following:
   - Raising: Lift legrest assembly up to desired height.
   - Lowering: Lift elevating legrest assembly up with one hand. While supporting the elevating legrest assembly (and user's leg), pull release lever up with other hand and lower legrest assembly to desired height.

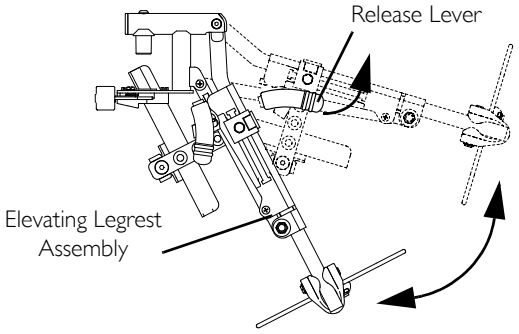

FIGURE 5 Raising/Lowering the Elevating Legrest

10.5 Adjusting Footplate Height and Calfpad Height/Depth

Adjusting the Footplate Height

1. Loosen locknut and washer securing the slide tube to the elevating legrest.
2. Reposition footplate to desired height securely tighten locknut and washer.
3. If necessary, repeat STEPS 1-2 to adjust remaining footplate height.

Adjusting Calfpad Height

1. Loosen the mounting bolt and washer that secure the calfpad bracket to the elevating legrest assembly.
2. Slide the calfpad bracket up or down until the desired calfpad height is obtained.
3. Tighten the mounting bolt and washer securing the calfpad bracket to the elevating legrest assembly.
4. If necessary, repeat STEPS 1-3 to adjust remaining calfpad bracket.

Adjusting Calfpad Depth

1. Remove the mounting screw, spacer and locknut that secure the calfpad to the calfpad bracket.
2. Insert mounting screw through one of four calfpad bracket mounting holes.
3. Using the mounting screw spacer and locknut, secure the calfpad to the calfpad bracket.
4. If necessary, repeat STEPS 1-3 to adjust remaining calfpad assembly.

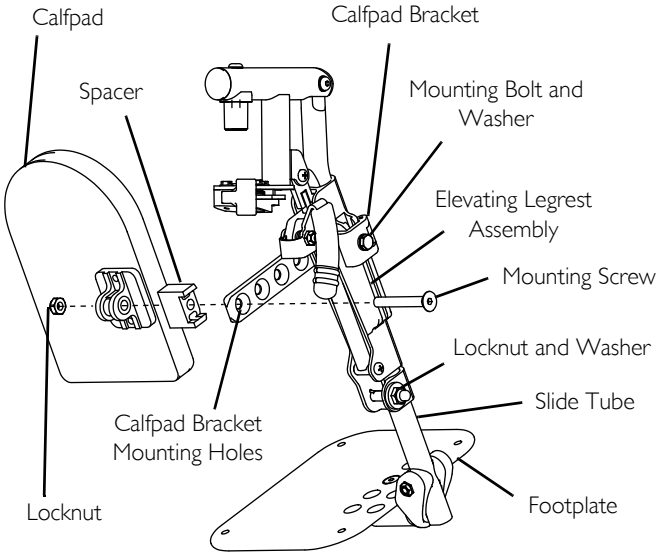

FIGURE 6 Adjusting Footplate Height and Calfpad Height/Depth

10.6 Composite/Articulating Footplate Heel Loop Replacement

Disassembly

Composite

1. Remove the hex screw and coved spacer that secure the lower footrest assembly to the swing away footrest assembly.
2. Remove the lower footrest assembly.
3. Remove the phillips screw and locknut that secure the heel loop to the footrest.
4. Slide heel loop off of the footrest.

Articulating

1. Remove the phillips screws, washers and spacers that secure the heel loop to the articulating footplate.

Reassembly

1. Replace heel loop.
2. Reverse the disassembly procedures.

When securing the heel loop to the footrest assembly, tighten phillips screw until the spacer is secure.

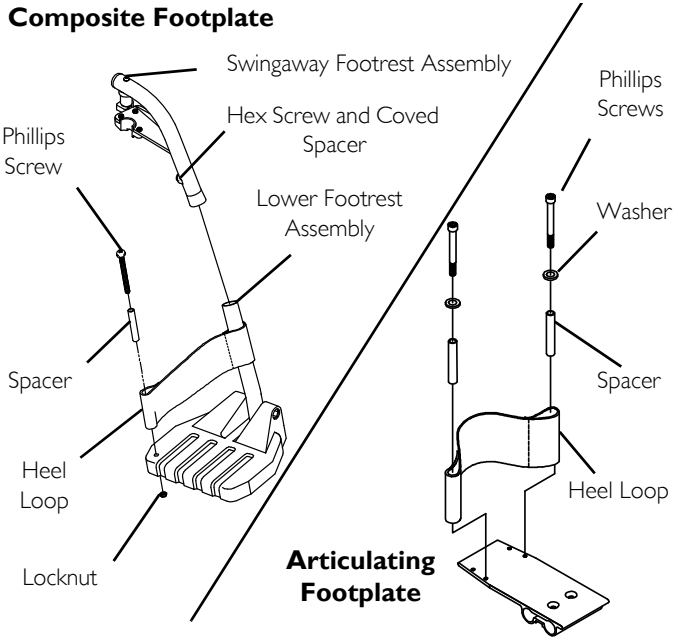

FIGURE 7 Composite/Articulating Footplate Heel Loop Replacement

10.7 Replacing Bolt On Sector Block

1. Remove the mounting screw and washer that secure the existing sector block to the front rigging support tube.
2. Position the new sector block on the front rigging support tube. Make sure the locking pin is facing up.
3. Secure the new sector block to the front rigging support tube with the existing mounting screw and washer.

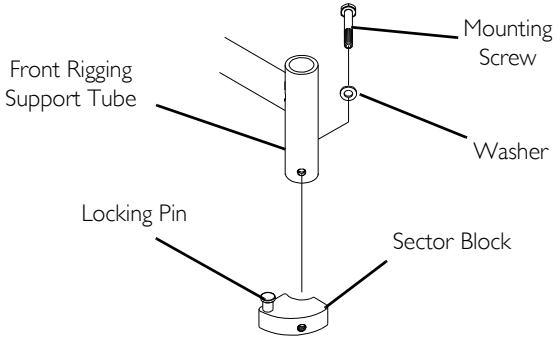

FIGURE 8 Replacing Bolt On Sector Block

10.8 Replacing Clamp on Sector Block

1. Remove the two mounting screws and washers that secure the support bracket and sector block to the front rigging support tube.
2. Position the new sector block on the front rigging support tube. Make sure the locking pin is facing up
3. Secure the new sector block to the front rigging support tube with the existing mounting screws and washers. Tighten securely.

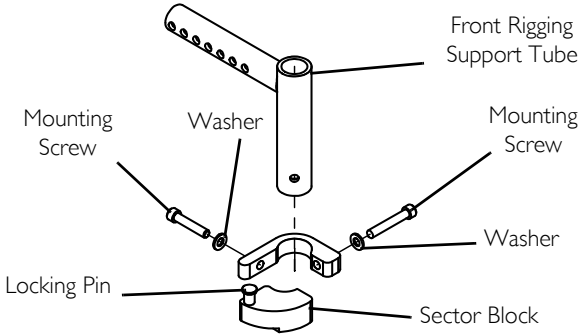

FIGURE 9 Replacing Clamp on Sector Block

11 Arms

WARNING

After any adjustments, repair or service and before use, make sure all attaching hardware is tightened securely - otherwise injury or damage may occur.

11.1 Replacing Conventional Armrest Pads

1. Remove the mounting screws that secure the existing armrest pad to the armrest assembly.
2. Install new armrest pad and securely tighten with the existing mounting screws.

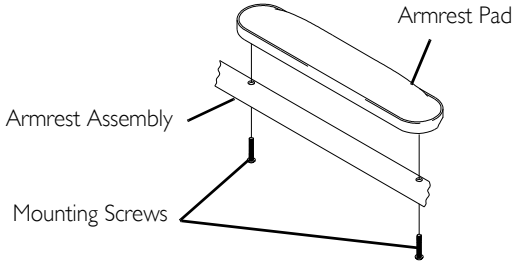

FIGURE 1 Adjusting T-Arm Depth

11.2 Adjusting the T-Arm

Adjusting T-Arm Height

1. Unlock the T-Arm by flipping the T-Arm release lever towards the inside of the wheelchair..

   If necessary, pull the T-Arm release lever out and rotate 180° so it can be flipped towards the outside of the wheelchair.

2. Slide the T-Arm to one of:
   - Low Height T-Arms - Nine positions.
   - High Height T-Arms - Seven positions.
3. If the inside T-Arm post does not slide up and down in the outside T-Arm post as desired, perform one of the following:
   - Tighten - Tightening the set screws on the outside T-Arm post will make it more difficult to move the inside T-Arm post up and down.
   - Loosen - Loosening the set screws on the outside T-Arm post will make it easier to move the inside T-Arm post up and down.
4. Lock the T-Arm by flipping the T-Arm release lever towards the front of the wheelchair.

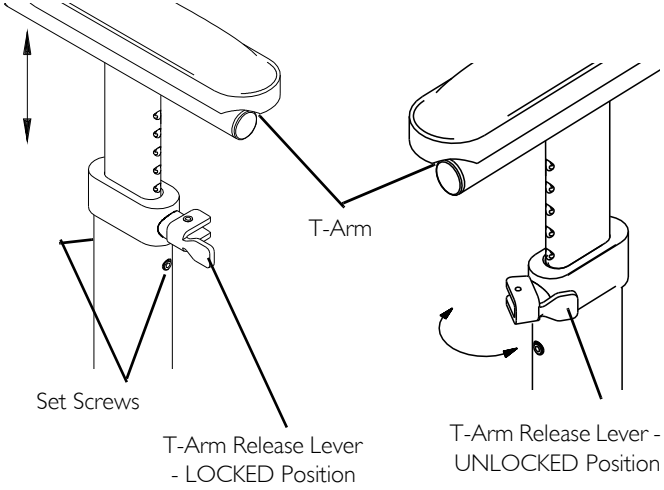

FIGURE 2 Adjusting T-Arm Height

11 ARMS

Adjusting T-Arm Width

1. Remove the two mounting screws that secure the arm pad to the arm tube.
2. Turn the arm pad around and reposition the arm pad on the arm tube.
3. Re-secure the arm pad to the arm tube with the two mounting screws. Tighten securely.
4. Repeat for the opposite side, if necessary.

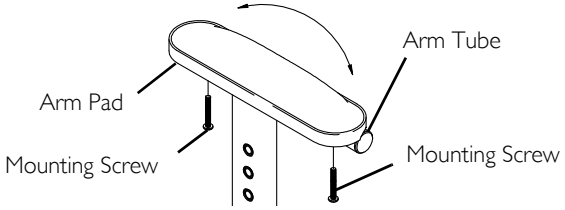

FIGURE 3 Adjusting T-Arm Width

Adjusting T-Arm Depth

1. Remove the two mounting screws that secure the arm pad to the arm tube.
2. Remove the two socket screws that secure the arm tube to the T-Arm post.
3. Reposition the arm tube on the T-Arm post:
   A. Desk Length Arms - to one of three positions depending on the desired arm pad depth.
   B. Full Length Arms - to one of five positions depending on the desired arm pad depth..

   Two additional positions are obtainable by turning the arm tube 180°.
4. Re-secure the arm tube to the T-Arm post with the two socket screws. Securely tighten.
5. Reattach the arm pad to the arm tube with the two mounting screws. Tighten securely.
6. Repeat for the opposite side, if necessary.

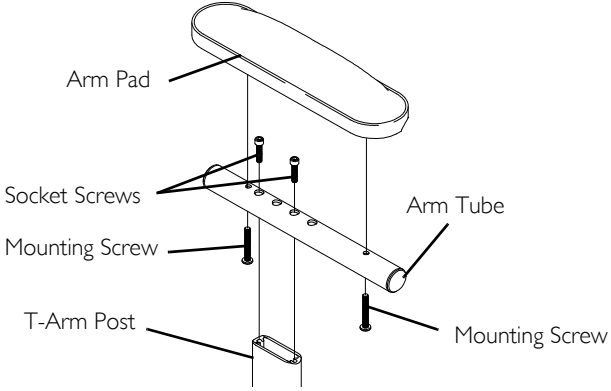

FIGURE 4 Adjusting T-Arm Depth

11.3 Adjusting T-Arm Sockets.

Perform this procedure if the T-Arm is too loose in the socket or does not easily slide UP and DOWN in the socket.

1. Remove the rear wheels from the wheelchair, if necessary. Refer to Installing/Removing Rear Wheels on page 116.
2. Loosen, but DO NOT remove the four hex screws and washers that secure T-Arm socket to T-Arm clamp..

   The T-Arm socket will disassemble if the four hex screws and washers are removed.

3. Slide the T-Arm into the T-Arm socket until the locking lever is in the slot in the T-Arm socket and an audible "click" is heard.
4. Squeeze the T-Arm socket and the T-Arm clamp together until the socket is flush with the T-Arm.
5. While holding the T-Arm socket and the T-Arm clamp together, tighten the four hex screws and washers. Tighten securely.
6. Press IN on the locking lever and lift the T-Arm straight UP and out of the T-Arm socket.
7. Repeat STEPS 3-6, if necessary until the T-Arm slides in the T-Arm socket as desired.
8. If necessary, install rear wheels. Refer to Installing/Removing Rear Wheels on page 116.

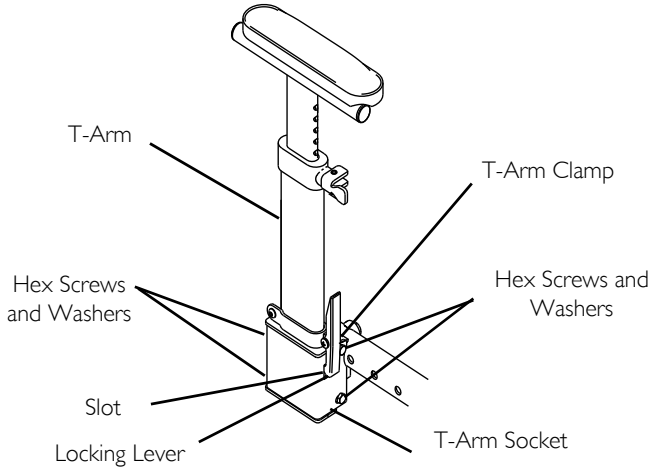

FIGURE 5 Adjusting T-Arm Sockets.

11.4 Adjusting T-Arm Transfer Assists And/or Side Guards.

1. Remove the T-Arm from the wheelchair. Refer to Installing/ Removing T-Arms on page 42.
2. Remove the two socket screws that secure the side guard to the bottom clamp..

   Adjusting the side guards will directly affect the position of the transfer assist.

3. Perform one of the following:
   - Small Side Guards - Move the bottom clamp UP to one of two mounting positions in the side guard.
   - Large Side Guards - Move the bottom clamp UP to one of three mounting positions in the side guard.
4. Secure the side guard to the bottom clamp with the two socket screws.
5. Install the T-Arm onto the wheelchair. Refer to Installing/Removing T-Arms on page 42.

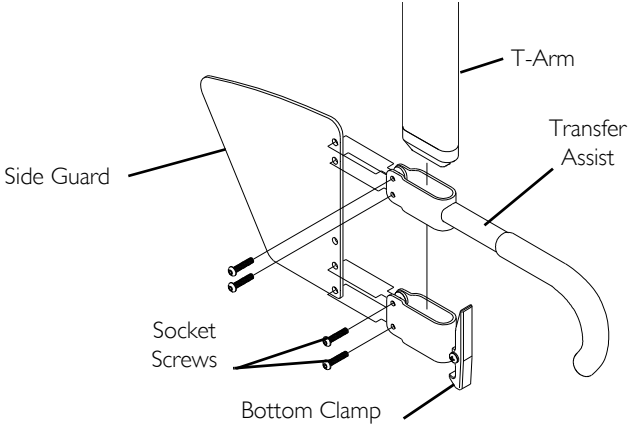

FIGURE 6 Adjusting T-Arm Transfer Assists And/or Side Guards.

11.5 Installing Locking Cantilever Arms.

When removing the locknuts and washers from the cantilever arm assembly, leave the top hex bolt, coved washers and spacer (between adjustment plate and cantilever arm) in place.

1. Slide the partially assembled cantilever arm assembly with mounting hardware through the back cane. Make sure the adjustment plate is towards the inside of the wheelchair..

This includes top hex bolt, coved washers and spacer (between adjustment plate and cantilever arm.

2. Slide the bottom hex bolt (w/coved washer) through the adjustment plate and back cane.
3. Securely tighten the cantilever arm to the wheelchair with two locknuts and washers.
4. Adjust the angle of the cantilever arm, if necessary. Refer to Adjusting the Locking Cantilever Arm Angle on page 96.

Adjusting Locking Cantilever Arm Height.

When removing the locknuts and washers from the cantilever arm assembly, leave the top hex bolt, coved washers and spacer (between adjustment plate and cantilever arm) in place.

1. Remove the two locknuts and washers securing the cantilever arm assembly to the back cane.
2. Remove the cantilever arm assembly with hardware from the back cane.
3. Perform STEPS 1-4 in Installing Locking Cantilever Arms. on page 95 to reposition the arm at the desired height.

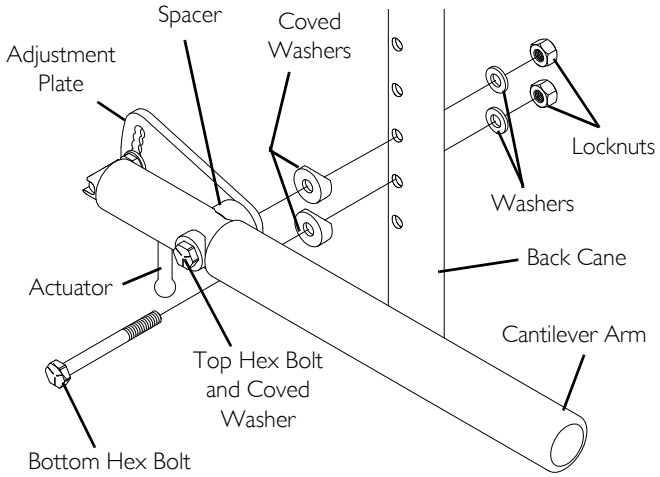

FIGURE 7 Installing Locking Cantilever Arms. - Adjusting Locking Cantilever Arm Height.

11 ARMS

Adjusting the Locking Cantilever Arm Angle

This adjustment is recommended if the back angle has been changed to keep arm parallel to the ground/floor.

1. Flip the cantilever arm up and out of the way.
2. Remove the locknut that secures the locking pin to the arm adjustment plate.
3. Determine the mounting hole in the arm adjustment plate that will be used to correspond to the back angle.
4. Securely tighten the locking pin and washer to the adjustment plate with a locknut.
5. Repeat STEPS 1-4 for the opposite side, if necessary.

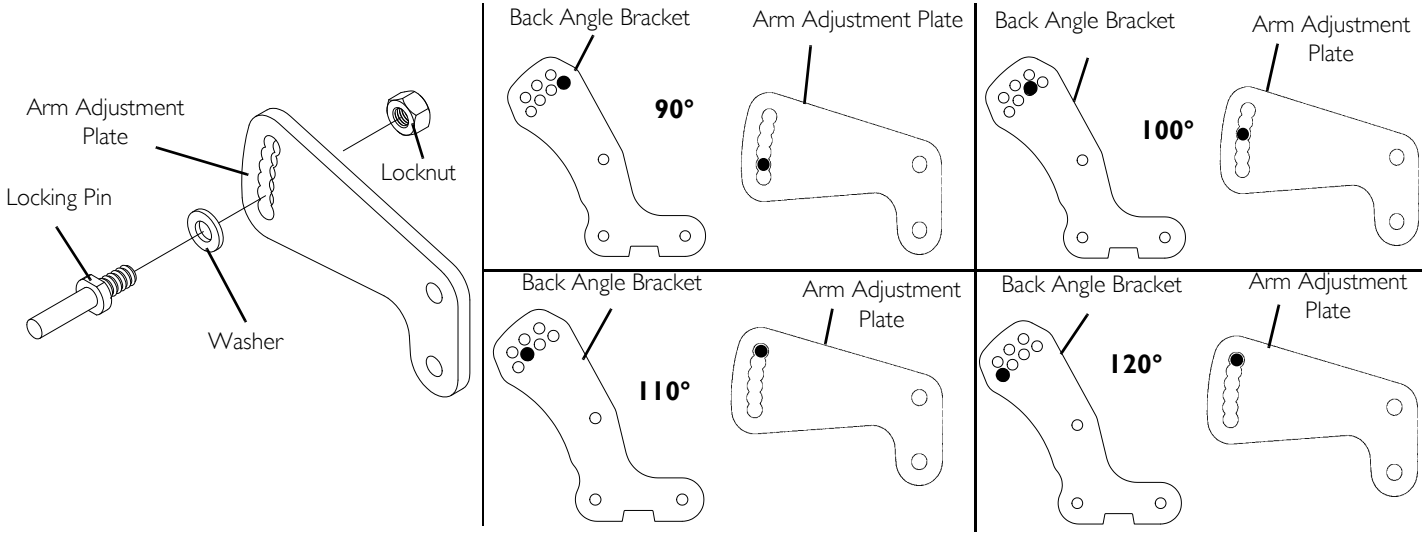

FIGURE 8 Adjusting the Locking Cantilever Arm Angle

11.6 Installing/Adjusting Non-Locking Cantilever Arms

WARNING

DO NOT use lap trays with non-locking cantilever arms.

Installing Non-Locking Cantilever Arms

1. Remove the locknut and washer from the lower hex bolt installed on the non-locking cantilever arm.
2. Slide hex bolt of the cantilever arm assembly into the desired back cane mounting hole.
3. Secure the cantilever arm to the wheelchair with a washer and locknut.
4. Adjust the angle of the cantilever arm, if necessary. Refer to Adjusting Non-Locking Cantilever Arm Angle on page 98.

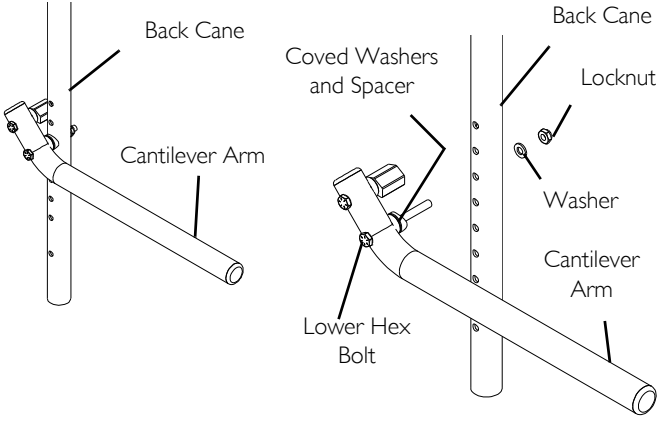

FIGURE 9 Installing Non-Locking Cantilever Arms

11 ARMS

Adjusting Non-Locking Cantilever Arm Height

1. Remove the locknut and washer from the lower hex bolt securing the cantilever arm to the back cane.
2. Slide the cantilever arm assembly out of the back cane.
3. Reposition the cantilever arm assembly to the desired mounting hole.
4. Secure the cantilever arm to the wheelchair with a washer and locknut.

Adjusting Non-Locking Cantilever Arm Angle

1. Loosen the mounting screw securing the cam to the cantilever arm.
2. Rotate the cam until the desired angle is achieved (Detail "A").
3. Tighten the mounting screw securing the cam to the cantilever arm.

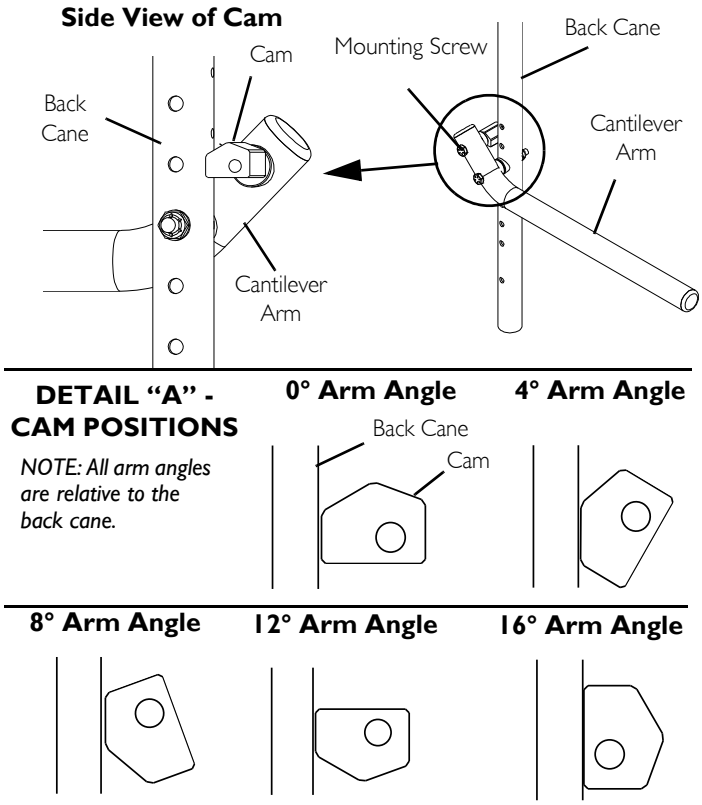

FIGURE 10 Adjusting Non-Locking Cantilever Arm Angle

11.7 Arm Pad Replacement for Cantilever Arms

1. Remove the mounting screws from the armrest pad.
2. Replace with NEW armrest pad.
3. Secure with existing hardware.

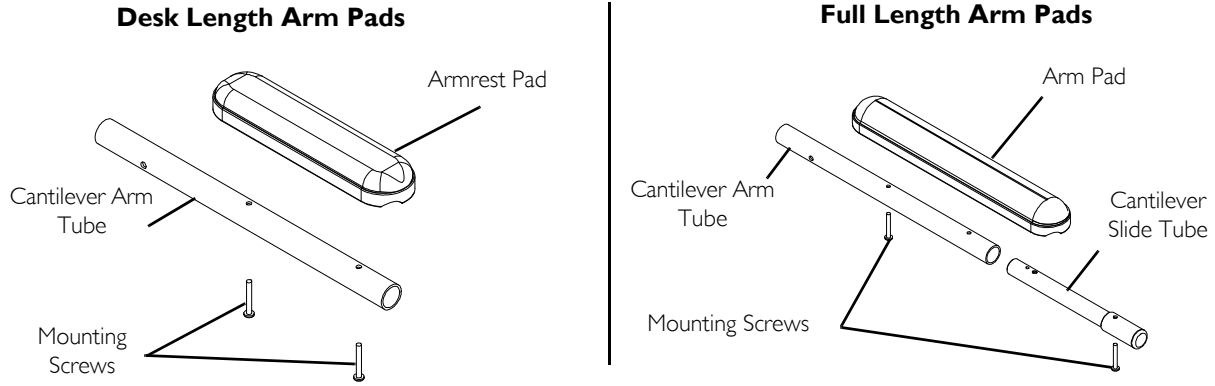

FIGURE 11 Arm Pad Replacement for Cantilever Arms

12 Back/Seat

WARNING

After any adjustments, repair or service and before use, make sure all attaching hardware is tightened securely - otherwise injury or damage may occur.

12.1 Adjusting the Height of the Adjustable Height Back Canes

Fixed Back Cane/Recliner Back Cane

Both back canes should be adjusted to the same adjustment hole.

1. Remove the back height adjustment screw and locknut that secure the back cane to the wheelchair frame.
2. Adjust the back cane to the desired height adjustment hole.
3. Reinstall the back height adjustment screw and locknuts that secure the back canes to the wheelchair frame.

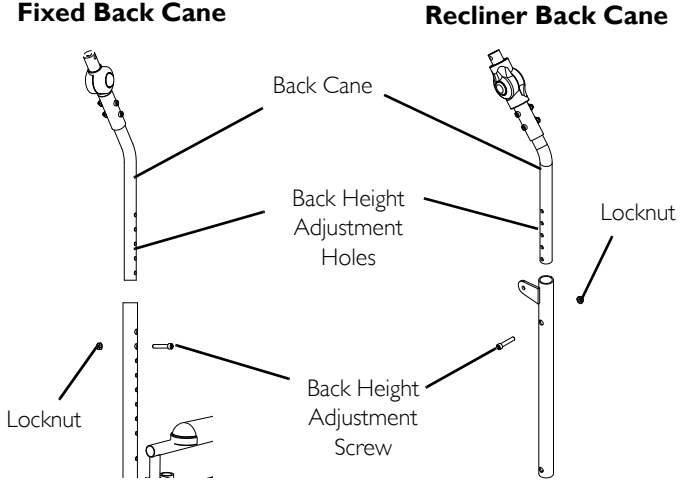

FIGURE 1 Adjusting the Height of the Adjustable Height Back Canes

12.2 Adjusting the Back Angle

Adjusting the Back Angle on Wheelchairs Equipped with Fixed Back

1. Remove the mounting screw, spacer and locknut that secures the inner and outer backrest mounting brackets together.
2. Repeat STEP 1 for the remaining back cane.
3. Adjust the back to the desired angle by aligning the mounting hole of the inner bracket with the mounting hole of the outer bracket. The available back angles are 90°, 95°, 100°, 105°, 110°, 115°, 120° (Detail "A").
4. Secure the inner and outer backrest mounting brackets together at the desire back angle with a mounting screw, spacer and locknut. Securely tighten.
5. Repeat STEP 4 for the remaining back cane.

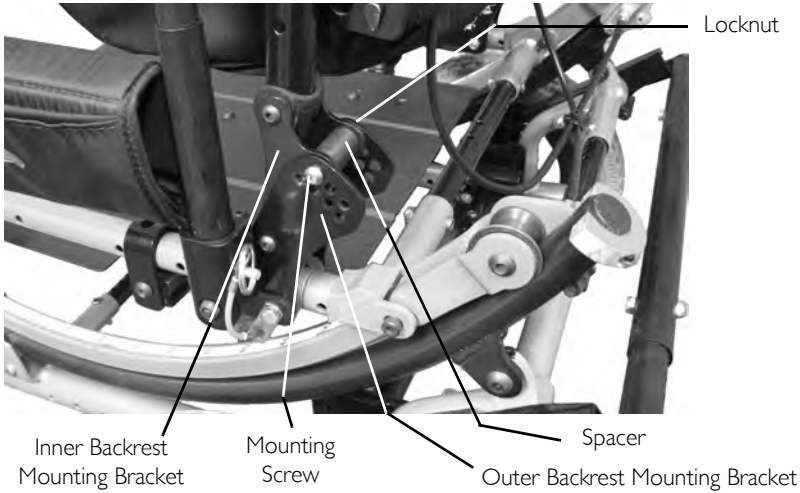

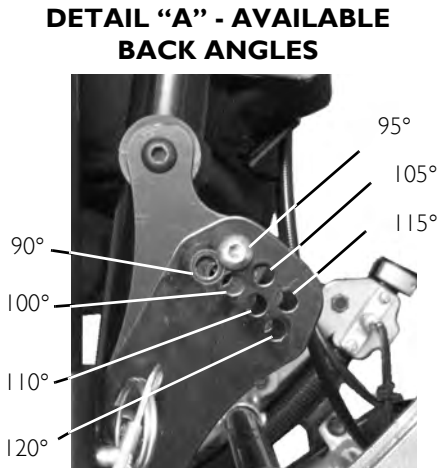

FIGURE 2 Adjusting the Back Angle on Wheelchairs Equipped with Fixed Back

Adjusting the Back Angle on Wheelchairs Equipped with Fold Down Back

1. Remove the mounting screw and locknut (not shown) that secures the backrest brackets to the adjuster plates and adjuster spacer.

   One adjuster plate and one backrest brackets are located on each side of the adjuster spacer.

2. Repeat STEP 1 for the remaining back cane.
3. Adjust the back to the desired angle by aligning the mounting hole of the adjuster plates and adjuster spacer with the mounting hole of the backrest brackets. The available back angles are 90˚, 95˚, 100˚, 105˚, 110˚, 115˚, 120˚ (Detail "A").
4. Secure the backrest brackets to the adjuster plates and adjuster spacer at the desired back angle with a mounting screw and locknut. Securely tighten.
5. Repeat STEP 4 for the remaining back cane.

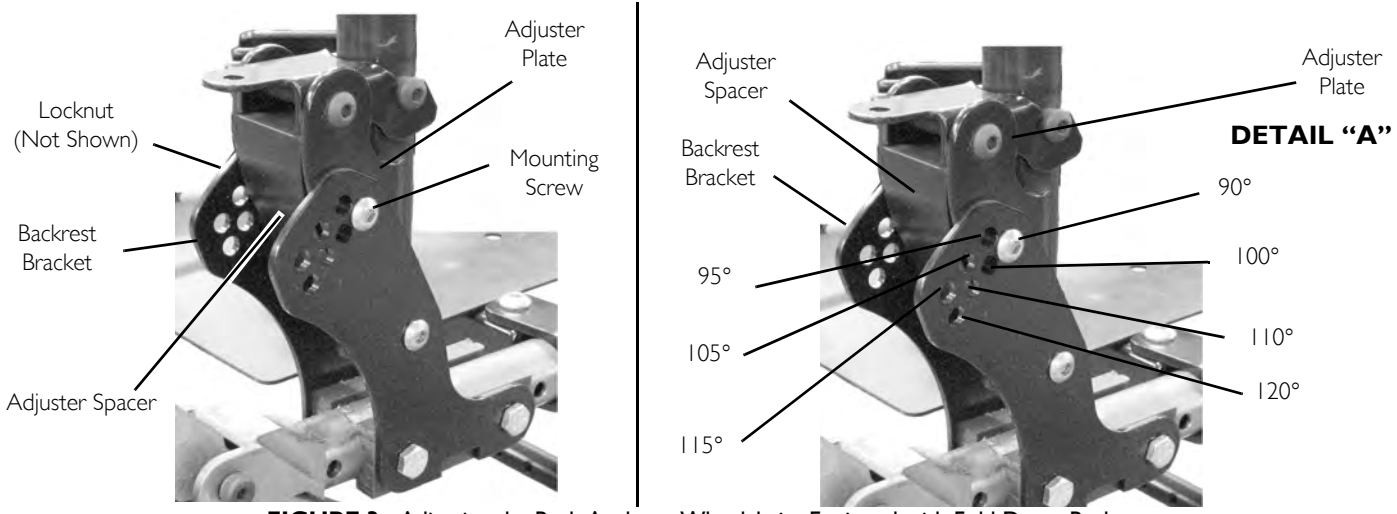

FIGURE 3 Adjusting the Back Angle on Wheelchairs Equipped with Fold Down Back

12.3 Installing/Removing Non-Adjustable Stroller Handles

Installing Stroller Handles

1. Remove plug buttons from both back canes, if necessary.
2. Slide stroller handle into the back canes.
3. Align the mounting holes of the stroller handle and the back canes.
4. Insert bolt through the back cane and stroller handle.
5. Secure the stroller handle to the back cane with the bolt and nut.
6. Pull on the stroller handle to make sure it is locked securely in place.

Removing Stroller Handles

1. Remove the locknuts that secure the stroller handle to the back cane.
2. Pull out the bolts that secure the stroller handle to the back canes.
3. Remove the stroller handle from the wheelchair.
4. Install the new stroller handle if desired. Refer to Installing Stroller Handles on page 103.

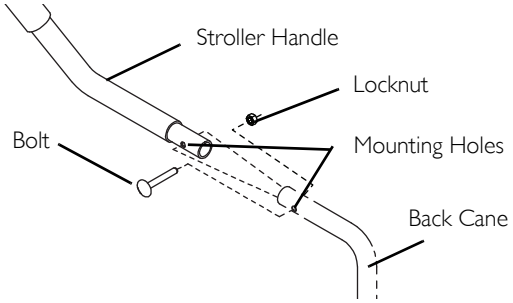

FIGURE 4 Installing/Removing Non-Adjustable Stroller Handles

12.4 Adjusting the Adjustable Angle Stroller Handles

1. Press and hold in both buttons on the outside of the hinge arm of the stroller handle.
2. Adjust stroller handle to desired angle.
3. Release the buttons.
4. Push down on stroller handle to ensure hinge arms hold the desired position of the stroller handle.

There will be an audible click.

If hinge arms do not hold the position, contact Invacare technical support

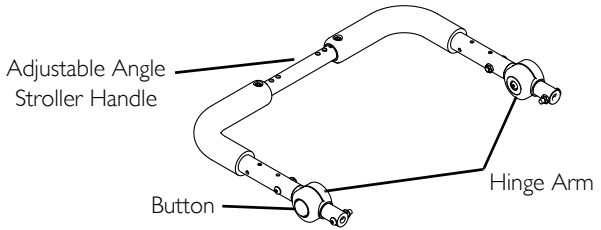

FIGURE 5 Adjusting the Adjustable Angle Stroller Handles

12.5 Installing/Replacing Seat Positioning Straps

Installing

1. Remove the hex screw and locknut that secures the back cane to the back plate.
2. Position the seat positioning strap against the back plate.
3. Install the hex screw through the seat positioning strap, coved spacers and back cane.
4. Securely tighten the seat positioning strap to the wheelchair with the locknut.
5. Repeat STEPS 1-4 for opposite side.

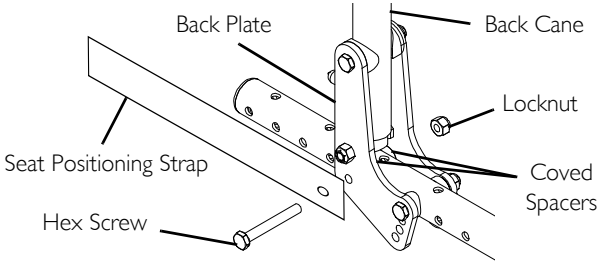

FIGURE 6 Installing/Replacing Seat Positioning Straps

Replacing

1. Remove the hex screw, locknut and seat positioning strap from the back plate of the wheelchair frame.
2. Discard existing seat positioning strap.
3. Install the new seat positioning strap to the wheelchair. Refer to Installing/Replacing Seat Positioning Straps on page 104.

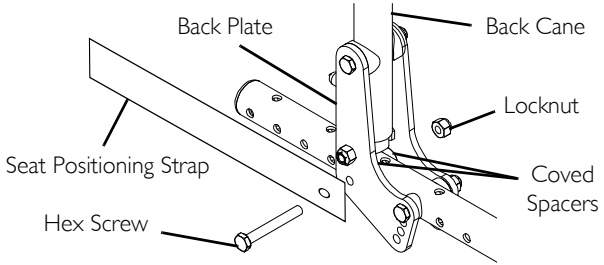

FIGURE 7 Installing/Replacing Seat Positioning Straps

12.6 Installing/Replacing Chest Positioning Straps

Installing

1. Position the chest positioning strap to one of the holes on the back cane.

   The standard recommended position for the chest positioning strap is in the top hole of the back cane, but may be mounted according to the user's needs.

2. Secure the chest positioning strap to the back canes with the new/existing hex screw and locknut.
3. Repeat STEPS 1-2 for opposite side.

Replacing

1. Remove the hex screw that secures the chest positioning strap to the back cane.
2. Discard existing chest positioning strap.
3. Repeat STEPS 1-2 for opposite side, if necessary.
4. Install the NEW chest positioning strap. Refer to Installing/Replacing Chest Positioning Straps on page 106.

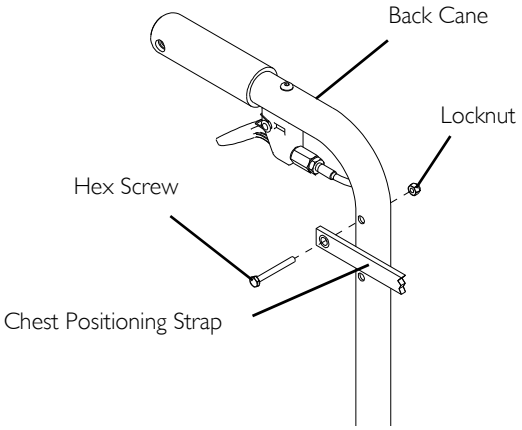

FIGURE 8 Installing/Replacing Chest Positioning Straps

12.7 Installing and Removing a Seating System

WARNING

Transport ready option only - This wheelchair has been tested for seating in a motor vehicle with the factory installed seating system only.

1. Ensure that the seating system is compatible with this wheelchair.
2. Refer to the seating system Owner's Manual for installation and removal.

13 Tilt

WARNING

After any adjustments, repair or service and before use, make sure all attaching hardware is tightened securely - otherwise injury or damage may occur.

13.1 Adjusting Tilt-In-Space Trigger Release Cables

WARNING

DO NOT adjust the trigger release cables while the cables are coiled up. The adjustment will be too tight when the cable is straightened and the tilt mechanism will not lock and hold its position, possibly causing injury.

This procedure applies to tilt-in-space release cables only.

1. To adjust the left tilt mechanism, do the following:
   A. Squeeze the trigger release lever of the right cable assembly.
   B. Check that the teeth of the right gear sector engage with the gear rack (Detail "B" in *FIGURE 1 on page 109*).
   C. Try to tilt the wheelchair. The wheelchair should not tilt.
2. If the left side of the wheelchair tilts without squeezing the trigger release lever of the left cable assembly or if the gear sector is not fully engaged with the gear rack, perform the following steps:
   A. Loosen the cable locking nut that secures the cable adjusting nut in place.
   B. Turn cable adjusting nut one of two ways:
      - If the cable is too loose, the tilt mechanism will not work.
      - If the cable is too tight, the gear sector will not be fully engaged with the gear rack.

WARNING

DO NOT over tighten the cable adjusting nut on the cable. Over tightening the cable adjusting nut on the cable WILL unlock the tilt mechanism, possibly causing injury.

- To Tighten - Turn the cable adjusting nut clockwise. DO NOT overtighten the cable adjusting nut.
- To Loosen - Turn the cable adjusting nut counterclockwise.

C. While holding the cable adjusting nut in place, tighten the cable locking nut against the cable adjusting nut.

D. Repeat STEP 1.

E. Repeat STEP 2 until the left side of the wheelchair does not tilt and that the gear sector fully engages with the gear rack.

3. If necessary, repeat STEPS 1 and 2 to adjust the left trigger release lever.

WARNING

When cables have been rerouted due to seat depth adjustment, chair width adjustment, or seating accommodation, cables MUST be readjusted.

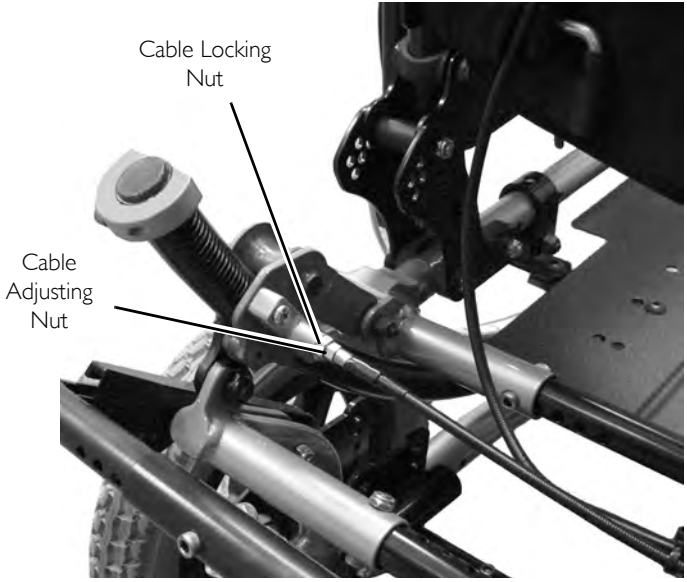

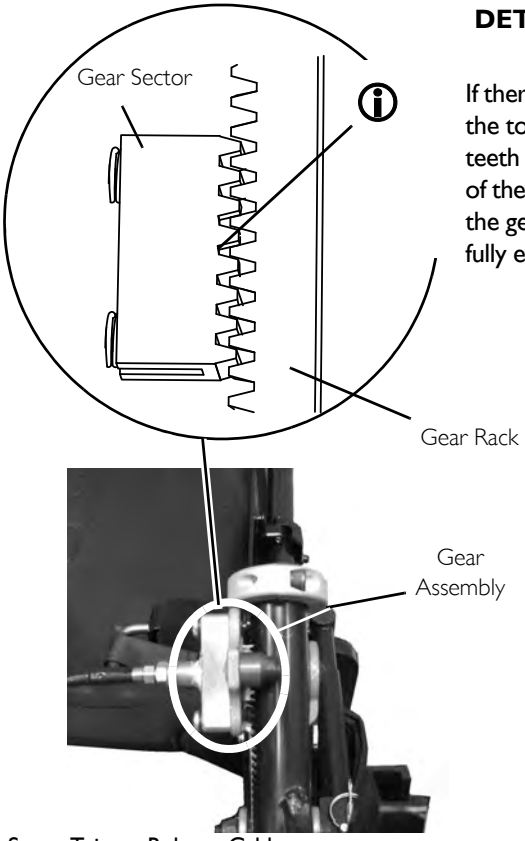

DETAIL "A"

If there is a gap between the top of the gear rack teeth and the bottoms of the gear sector teeth, the gear sector is not fully engaged.

FIGURE 1 Adjusting Tilt-In-Space Trigger Release Cables

13.2 Adjusting Hublock Cables

WARNING

DO NOT adjust the hublock cables while the cables are coiled up. The adjustment will be too tight when the cable is straightened and the tilt mechanism will not lock and hold its position, possibly causing injury.

1. Lift up on the hublock lever to test the hublock.

   If the cable is too loose, the hublock will not work.

2. Perform one of the following:
   A. Loosen the cable locking nut that secures the cable adjusting nut in place.
   B. Turn cable adjusting nut one of two ways:
      - To Tighten - Turn the cable adjusting nut clockwise. DO NOT overtighten the cable adjusting nut (FIGURE 1).
      - To Loosen - Turn the cable adjusting nut counterclockwise (FIGURE 1).
   C. While holding the cable adjusting nut in place, tighten the cable locking nut against the cable adjusting nut.

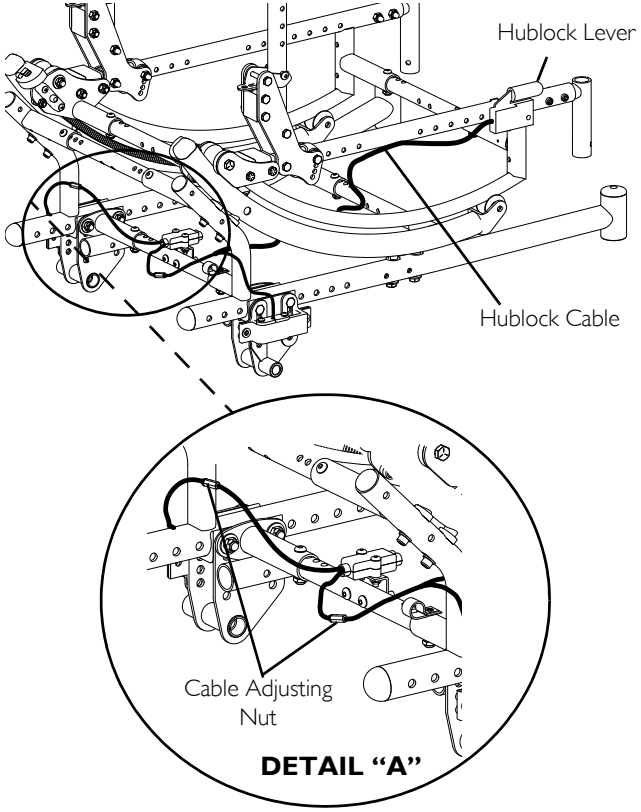

FIGURE 2 Adjusting Hublock Cables

13.3 Positioning Tilt Locking Collars

WARNING

Warning indicates a potentially hazardous situation which, if not avoided, could result in death or serious injury.

Anterior (forward) tilt is a feature of this wheelchair designed for the use of a healthcare professional or assistant only. Engagement of the anterior (forward) tilt MUST NEVER be performed by the wheelchair user. When anterior (forward) tilt is needed, it MUST ALWAYS be engaged by a healthcare professional or assistant.

The back height, seat depth, back angle, seating system, tilt angle, seat height, size/position of the rear wheels, size/position of the front casters, as well as the user condition directly relate to the stability of the wheelchair. Any change to one or any combination of the eleven may cause the wheelchair to decrease in stability. These adjustments MUST be performed by a qualified technician.

DO NOT operate the wheelchair when the seat frame is in the anterior (forward) tilt position (frame stops in the lower position and approximately 5° forward tilt). Serious bodily injury may occur to the patient and the assistant(s).

TO HEALTHCARE PROFESSIONALS/ASSISTANTS:

Make sure the occupant of the wheelchair is properly positioned.

ALWAYS engage both wheel locks.

After any adjustments, repair or service and before use, make sure all attaching hardware is tightened securely and locking collars are positioned at the same position on the tilt slide.

Adjusting Upper Tilt Locking Collar.

This procedure adjusts the degree of tilt that the wheelchair returns to for normal operation. If the amount of tilt MUST be limited. Refer to Adjusting Lower Tilt Locking Collar on page 113.

1. Loosen the set screw that secure the tilt locking collar to the tilt slide.

2. Repeat STEP 1 for opposite side of wheelchair.

   To determine tilt angle relative to the seat frame, place a magnetic protractor (available at any hardware store) on the back and adjust the back until the magnetic protractor reads desired angle of tilt.

3. Tilt the wheelchair to the desired angle of tilt.

   The Solara seat frame is at a 5° back angle relative to the ground.

4. Position the two tilt locking collars against the bearing housing.

   Before tightening, ensure that the two tilt locking collars are at the same position on the tilt slide.

5. Securely tighten the two set screws of the tilt locking collars.

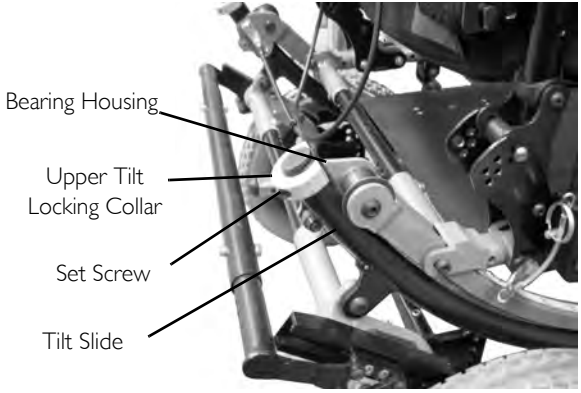

FIGURE 3 Adjusting Upper Tilt Locking Collar.

Adjusting Lower Tilt Locking Collar

This procedure limits the amount of tilt the wheelchair may have. If adjusting the angle the wheelchair returns to. Refer to Adjusting Upper Tilt Locking Collar. on page 111.

1. Loosen the set screw that secures the tilt locking collar to the tilt slide (Detail "A").
2. Repeat STEP 1 for opposite side of wheelchair.

To determine tilt angle relative to the seat frame, place a magnetic protractor (available at any hardware store) on the back and adjust the back until the magnetic protractor reads desired angle of tilt.

3. Tilt the wheelchair to the desired angle of tilt.
4. Position the two tilt locking collars against the bearing housing.

Before tightening, ensure that the two tilt locking collars are at the same position on the tilt slide.

5. Securely tighten the two set screws of the tilt locking collars (Detail "A").

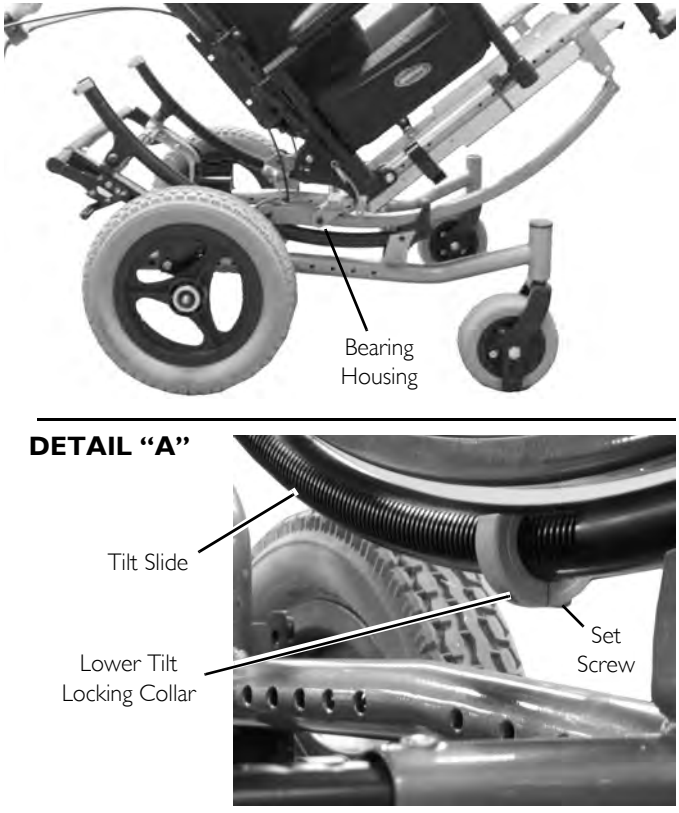

FIGURE 4 Adjusting Lower Tilt Locking Collar

14 Vent Tray

14.1 Adjusting the Vent Tray Height

1. Remove the two mounting screws and two locknuts that secure the front vent tray hanger bracket to the front cross tube.
2. Remove the four mounting screws, eight washers and four locknuts that secure the rear vent tray hanger brackets to the wheelchair frame.
3. Adjust the vent tray to the desired height.

   All three vent tray hanger brackets should be adjusted to the same height adjustment hole.

4. Secure the front vent tray hanger bracket to the wheelchair frame with two mounting screws and locknuts. Tighten securely.
5. Secure the rear vent tray hanger brackets to the wheelchair frame with four mounting screws, eight washers and four locknuts. Tighten securely.

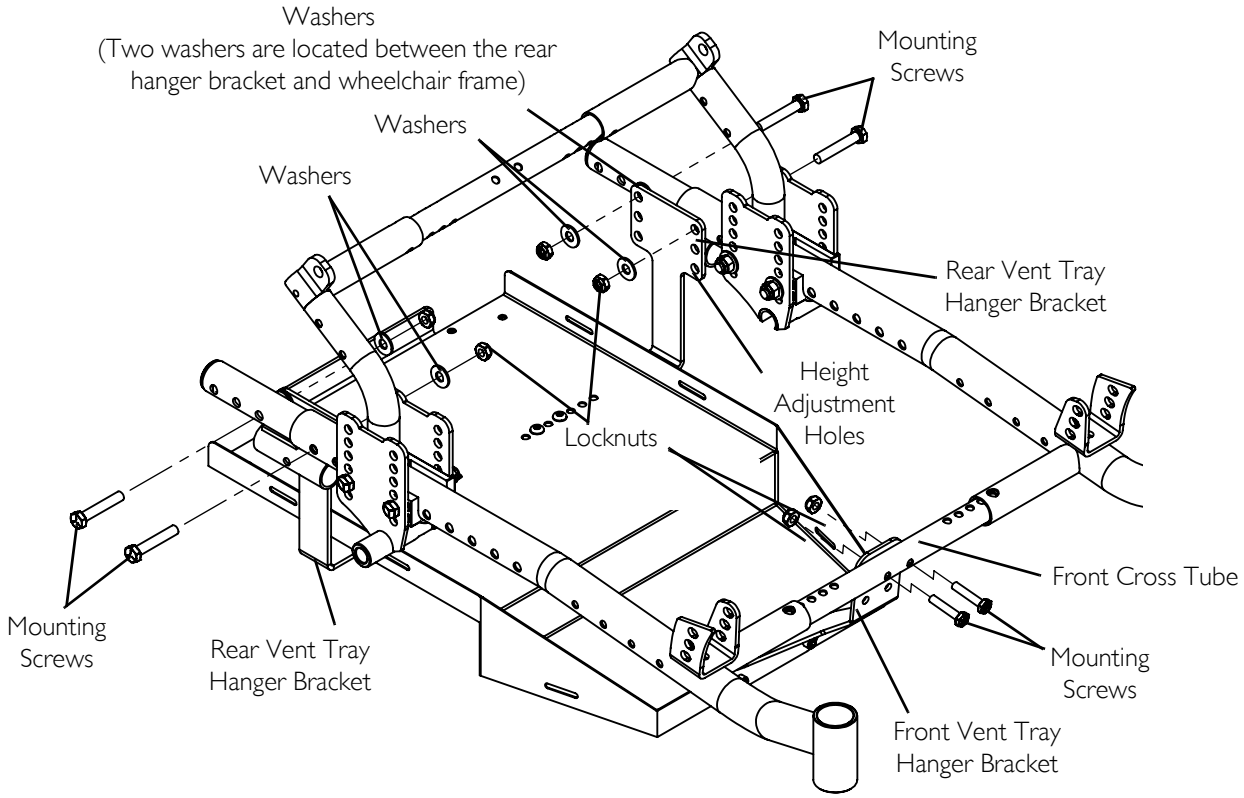
Washers
(Two washers are located between the rear hanger bracket and wheelchair frame)
Washers
Washers
Mounting Screws
Rear Vent Tray Hanger Bracket
Height Adjustment Holes
Locknuts
Front Cross Tube
Mounting Screws
Front Vent Tray Hanger Bracket
Mounting Screws
Rear Vent Tray Hanger Bracket

15 Wheels/Forks

WARNING

After any adjustments, repair or service and BEFORE use, make sure all attaching hardware is tightened securely - otherwise injury or damage may occur.

15.1 Installing/Removing Rear Wheels

Quick-Release

Refer to Installing/Removing Rear Wheels - Quick-Release on page 56.

Permanent Axle

To remove rear wheels, reverse STEPS 3-6 this procedure.

1. If necessary, remove the permanent axles from the packaged container.
2. Apply Loctite 242 onto the threads inside the nut.
3. Install permanent axle through lock washer and the rear wheel and axle plate.
4. Securely tighten the wheel to the wheelchair frame with nut.

   Only 12-inch rear wheel is shown. All other wheels will install/remove in the same manner.
5. Repeat STEPS 2-4 for other rear wheel assembly.
6. Adjust the wheel locks. Refer to Wheel Lock Adjustment on page 118.

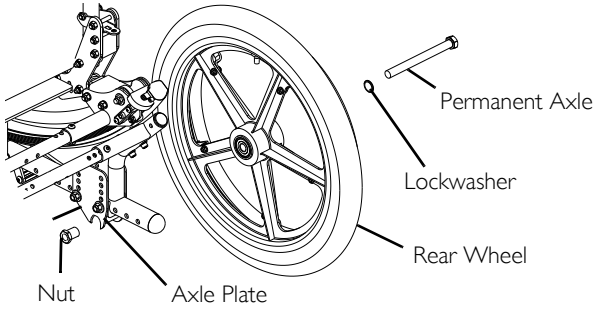

FIGURE 15.1 Installing/Removing Rear Wheels - Permanent Axle

15.2 Seat-To-Floor Height Adjustment

WARNING

Repositioning the axle plates (seat-to-floor height) MUST be performed by a qualified technician.

15.3 Adjusting Forks

1. Remove the dust cover from the caster headtube.
2. To properly tighten caster journal system and guard against flutter, perform the following check:
   A. Tip back the wheelchair to floor.
   B. Pivot both forks and casters to top of their arc simultaneously.
   C. Let casters drop to bottom of arc (wheels should swing once to one-side, then IMMEDIATELY rest in a straight downward position).
   D. Adjust locknuts according to freedom of caster swing.
3. Test wheelchair for maneuverability.
4. Readjust locknuts if necessary, and repeat STEPS 1-3 until correct.
5. Snap dust cover into the caster headtube.
6. Repeat STEPS 1-5 for opposite side, if necessary.

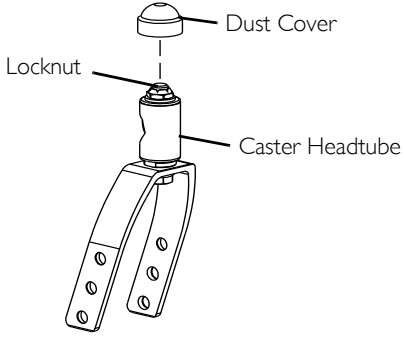

FIGURE 15.2 Adjusting Forks

16 Wheel Locks/Anti-Tippers

WARNING

After ANY adjustments, repair or service and BEFORE use, make sure all attaching hardware is tightened securely - otherwise injury or damage may occur.

DO NOT attempt to stop a moving wheelchair with wheel locks. Wheel locks are not brakes.

16.1 Wheel Lock Adjustment

Push to Lock or Pull to Lock Wheel locks

When changing the position of the rear wheels, the wheel locks MUST be repositioned.

Before adjusting or replacing the wheel lock assemblies, ensure that the tires are inflated to the recommended p.s.i located on the side wall of the tire.

1. Loosen, but DO NOT remove the two socket screws that secure the wheel lock assembly to the wheellock mounting bracket.
2. Measure the distance between the wheel lock shoe and the rear wheel.
3. Slide the wheel lock assembly along the wheel lock mounting bracket until the measurement is between 5/32 and 5/16-inches.
4. Securely tighten the two socket screws.
5. Repeat STEPS 1-4 for the opposite wheel lock.
6. Engage the wheel locks and push against the wheelchair to determine if the wheel locks engage the rear wheels enough to hold the wheelchair.
7. If the wheel locks DO NOT hold the wheelchair, repeat STEPS 1-6 until wheel lock engagement holds the wheelchair.

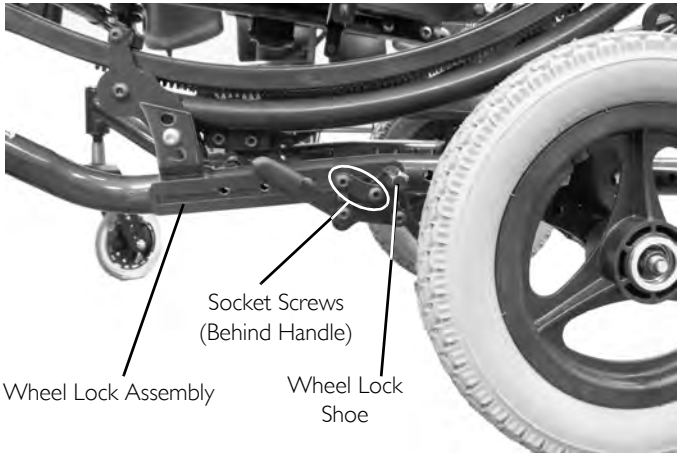

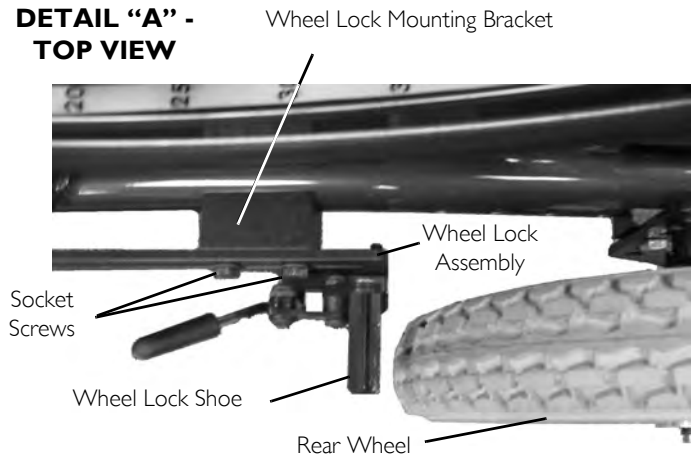

FIGURE 1 Wheel Lock Adjustment - Push to Lock or Pull to Lock Wheel locks

Footlock

When changing the position of the rear wheels, the wheel locks MUST be repositioned.

Before adjusting or replacing the wheel lock assemblies, ensure that the tires are inflated to the recommended p.s.i on the side wall of the tire.

1. Loosen, but DO NOT remove the four mounting screws (two mounting screws on each side) that secure the wheel lock bracket to the wheelchair frame. (Detail "A")
2. Measure the distance between the wheel lock shoe and the rear wheel.
3. Slide the wheel lock bracket along the wheelchair frame until the measurement between the wheel lock shoe and rear wheel is approximately 1.25 inches. If 1.25 inch measurement is not achievable, perform the following:
   A. Remove the mounting screw, washers and locknut that secure the connecting wheel link to the footlock lever (Detail "B").

B. Slide the wheel lock bracket along the wheelchair frame until the measurement between the wheel lock shoe and rear wheel is approximately 1.25 inches.

C. Secure the foot lock lever to the connecting wheel lock link in the corresponding adjustment hole.

D. Repeat STEPS 3 for remaining wheel lock bracket.

4. Tighten the four mounting screws to 85 - 95inch pounds.
5. Engage the footlock and push against the wheelchair to determine if the footlock engages the rear wheels enough to hold the wheelchair.
6. Repeat STEPS 1-5 until the footlock engages the rear wheels enough to hold the wheelchair.

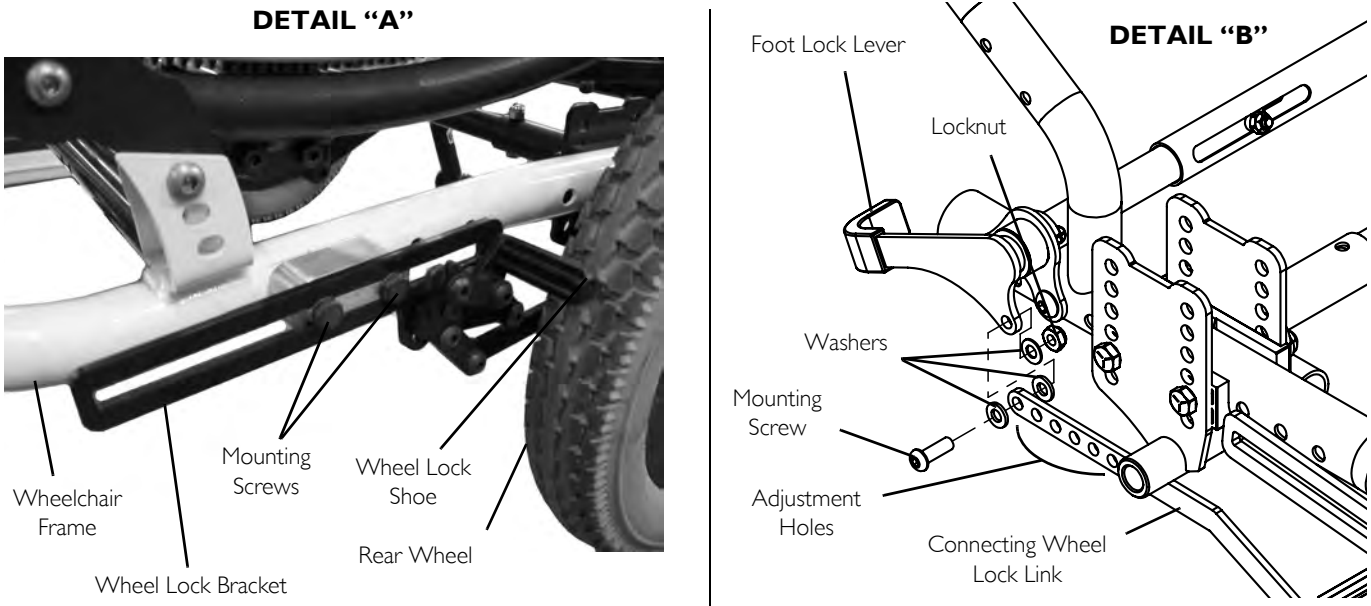

FIGURE 2 Wheel Lock Adjustment - Footlock

17 Recliner Back Option

WARNING

After any adjustments, repair or service and before use, make sure all attaching hardware is tightened securely - otherwise injury or damage may result.

The back height, seat depth, back angle, seating system, tilt angle, seat height, size/position of the rear wheels, size/position of the front casters, as well as the user condition directly relate to the stability of the wheelchair. Any change to one or any combination of the eleven may cause the wheelchair to decrease in stability. These adjustments MUST be performed by a qualified technician.

CAUTION

DO NOT overtighten hardware attaching to the frame. This could cause damage to the frame tubing.

17.1 Replacing Back/Headrest Upholstery.

Back Upholstery

1. Remove the ten mounting screws and washers that secure the back upholstery to the back canes.
2. Remove existing back upholstery from back canes.
3. Install new back upholstery onto the back canes.
4. Install the ten mounting screws and washers that secure the back upholstery to the back canes.

17 RECLINER BACK OPTION

Headrest Upholstery

1. Remove the six mounting screws and washers that secure the headrest upholstery to the headrest extensions.
2. Remove the existing headrest upholstery from the headrest extensions.
3. Install the new headrest upholstery onto the headrest extensions.
4. Install the six mounting screws and washers that secure the headrest upholstery to the headrest extensions.

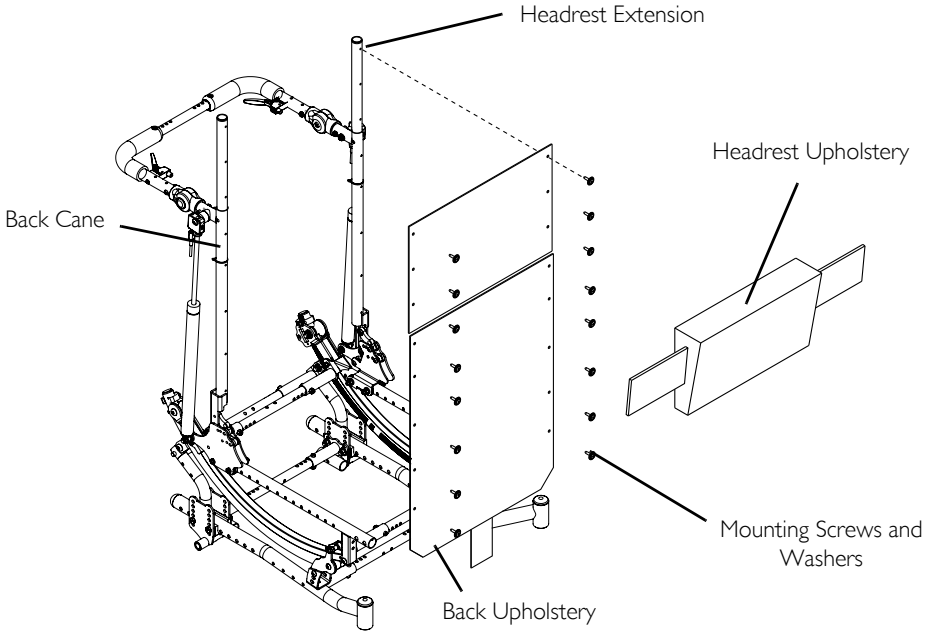

FIGURE 1 Replacing Back/Headrest Upholstery.

18 Contracture Foot assembly

18.1 Adjusting the Angle of the Contracture Assembly

Bilateral Contracture Footplate

1. Remove the top mounting bolt and locknut that secures the contracture support tube to the angle adjustment plate.
2. Rotate the contracture support tube and align with one of the nine mounting holes in the angle adjustment plate.
3. Reinstall the mounting bolt and locknut. Securely tighten.
4. Perform STEPS 1 -4 for remaining footplate.

Contracture Platform

1. Remove the top mounting bolt and locknut that secures the contracture support tube to the angle adjustment plate.
2. Rotate the contracture support tube and align with one of the nine mounting holes in the angle adjustment plate.
3. Reinstall the mounting bolt and locknut. Securely tighten.

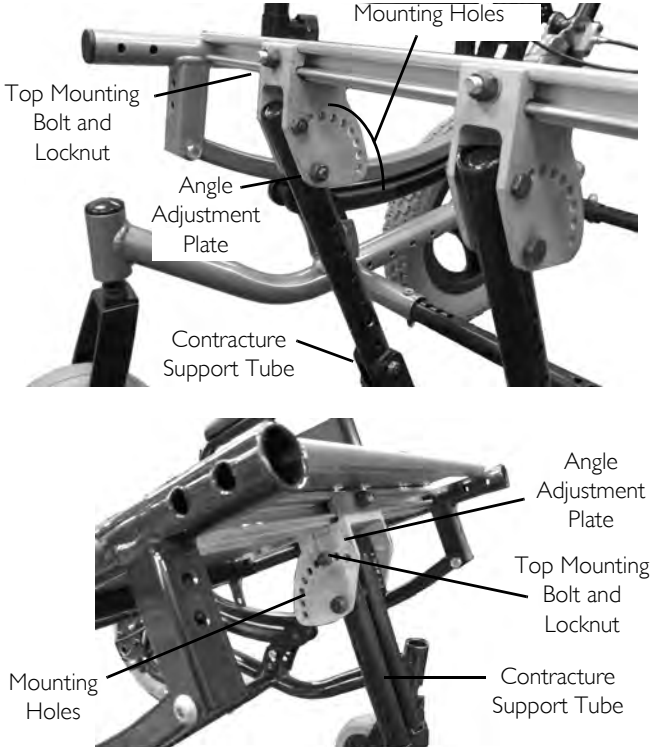

FIGURE 1 Adjusting the Angle of the Contracture Assembly

18.2 Adjusting the Angle of the Bilateral Contracture Footplate

Adjusting the Side to Side Angle

1. Loosen the adjustment screw located underneath the contracture footplate. See Detail "A".
2. Tilt the contracture footplate left or right to the desired angle. See Detail "B".
3. Retighten the adjustment screw.
4. If necessary, repeat STEPS 1-3 on remaining contracture footplate.

DETAIL "A"

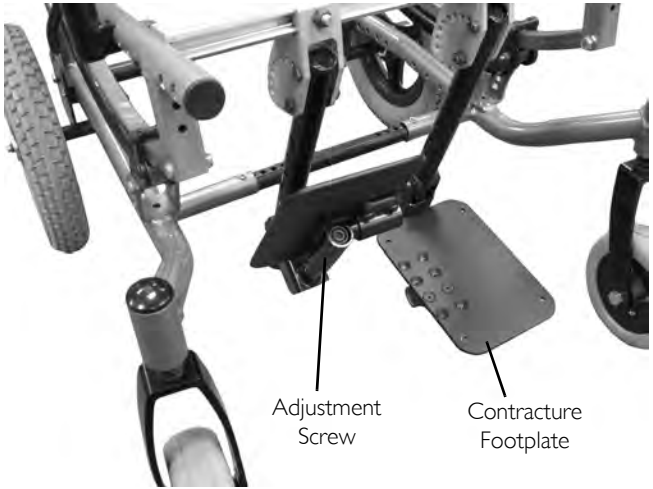

DETAIL "B"

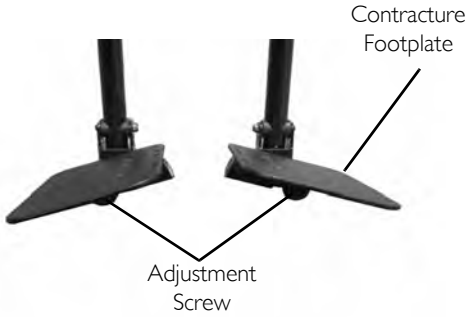

FIGURE 2 Adjusting the Angle of the Contracture Assembly

Adjusting the Front to Back Angle

1. Loosen the adjustment screw located underneath the contracture footplate. See Detail "A".
2. Tilt the contracture footplate forward or back to the desired angle. See Detail "B".
3. Retighten the adjustment screw.
4. If necessary, repeat STEPS 1-3 on remaining contracture footplate

DETAIL "A"

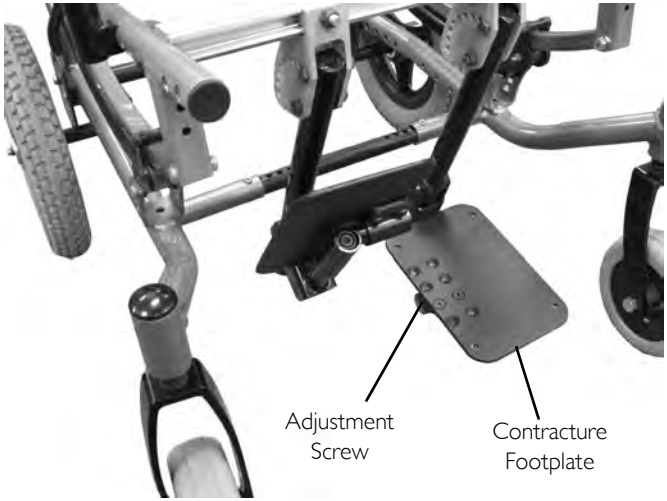

DETAIL "B" - SIDE VIEW

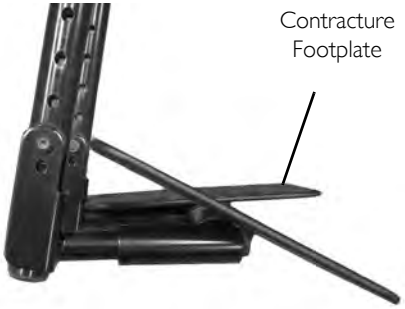

FIGURE 3 Adjusting the Front to Back Angle

18.3 Depth Adjustment

Bilateral Contracture Footplate

1. Remove the two flat screws and locknuts that secure the contracture footplate to the footplate angle bracket.
2. Move the contracture footplate to one of four mounting holes.
3. Reinstall the four flat screws and locknuts that secure the contracture footplate to the footplate angle bracket. Tighten securely.
4. If necessary, repeat STEPS 1-3 on remaining contracture footplate.

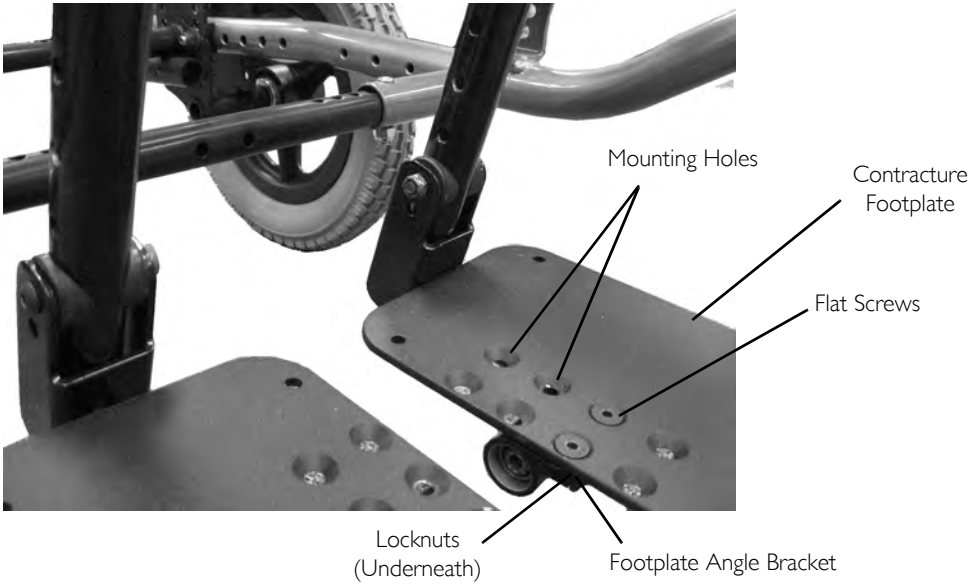

FIGURE 4 Depth Adjustment - Bilateral Contracture Footplate

Contracture Platform

1. Remove the four flat screws that secure the contracture platform to the footplate angle bracket.
2. Move the contracture platform to one of three mounting positions.
3. Reinstall the four flat screws and locknuts that secure the contracture platform to the footplate angle bracket. Tighten securely.

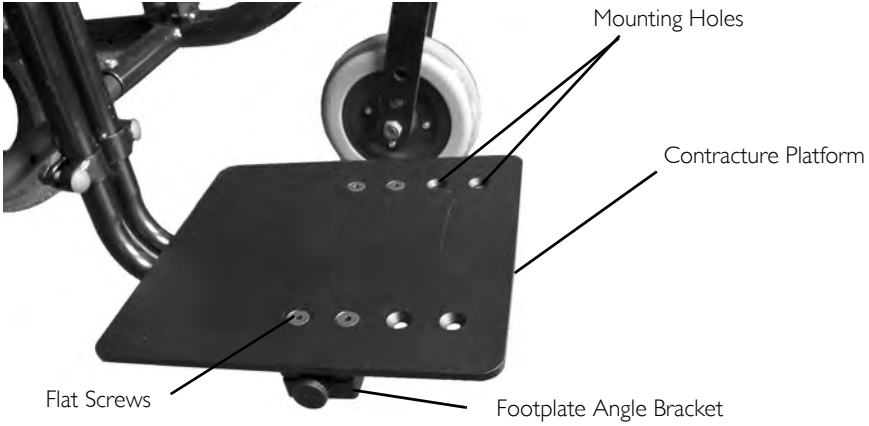

FIGURE 5 Depth Adjustment - Contracture Platform

18.4 Contracture Footplate Height Adjustment

Bilateral Contracture Footplate

1. Remove the mounting bolt, two coved washers, washer and locknut that secure the footplate bracket to the contracture support.
2. Move the footplate bracket up/down to achieve desired height.
3. Align one of the mounting holes in the footplate bracket with one of the seven mounting holes on the contracture support.
4. Secure the footplate bracket to the contracture support with the mounting bolt, two coved washers, washer and locknut. Securely tighten.
5. If necessary, repeat STEPS 1-4 on remaining contracture footplate.

18 CONTRACTURE FOOT ASSEMBLY

Contracture Platform

1. Loosen, but DO NOT remove the two mounting bolts and locknuts that secure the contracture platform to the upper support.
2. Slide the contracture platform to the desired height.
3. Tighten the two mounting bolts and locknuts that secure the contracture platform to the upper support.

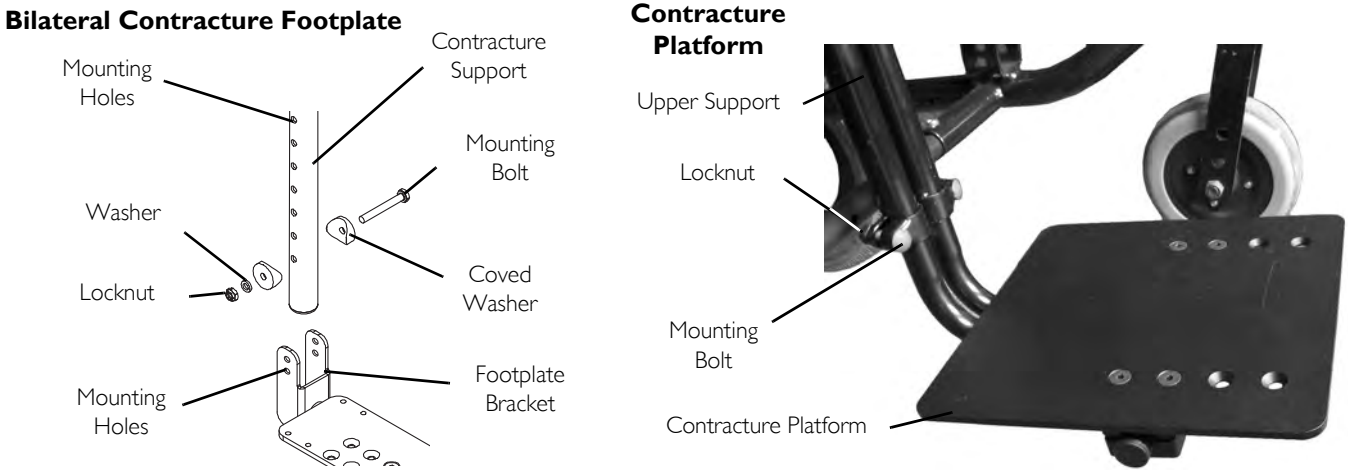

FIGURE 6 Contracture Footplate Height Adjustment

18.5 Contracture Assembly Width Adjustment

Bi-lateral Contracture Footplate

1. Loosen the locknut on the angle adjustment plate.
2. Slide the contracture assembly left or right to the desired location.
3. Retighten the locknut on the angle adjustment plate to secure the contracture footplate in position.
4. Repeat STEPS 1-3 for remaining footplate if desired.

Contracture Platform

1. Loosen the locknut on the angle adjustment plate.
2. Slide the contracture platform left or right to the desired location.
3. Retighten the locknut on the angle adjustment plate to secure the contracture platform in position.

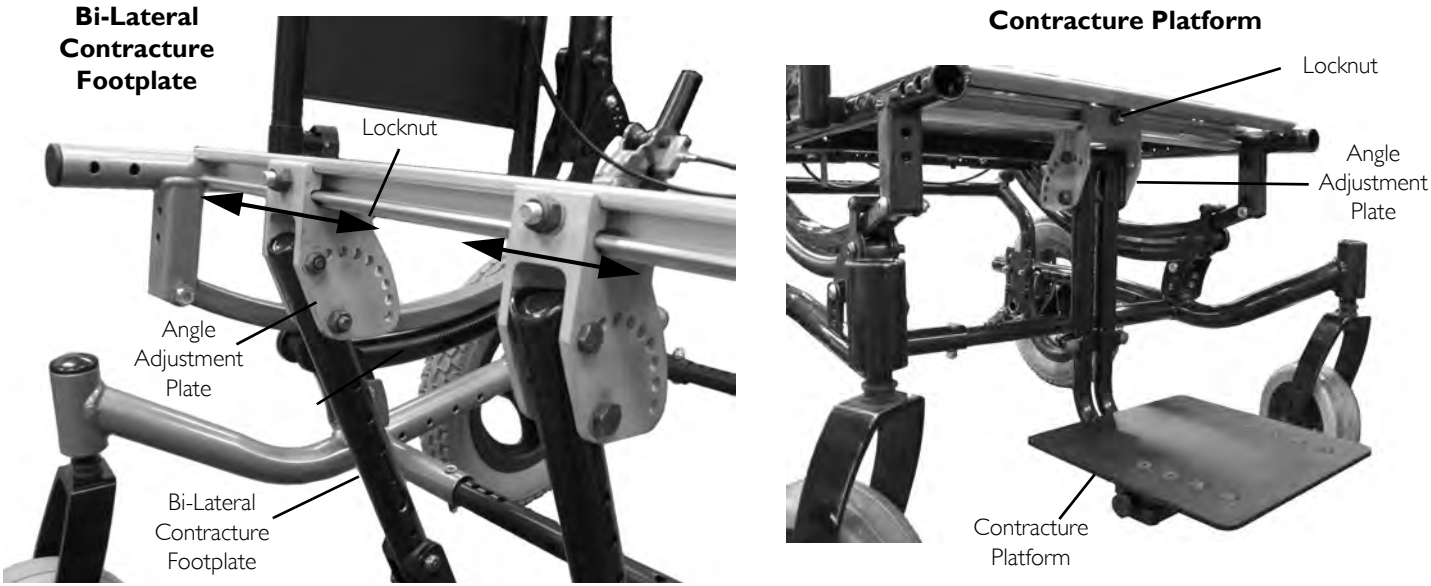

FIGURE 7 Contracture Assembly Width Adjustment

18 CONTRACTURE FOOT ASSEMBLY

Replacing the Contracture Footplate Heel Loop

This procedure applies to the bilateral contracture footplate only.

1. Tilt the contracture footplate forward to gain access to the mounting screws that secure the heel loop to the underside of the contracture footplate. Refer to Adjusting the Angle of the Bilateral Contracture Footplate on page 124.
2. Remove the four mounting screws and washers that secure the existing heel loop to the contracture footplate.
3. Reverse STEPS 1-2 to install the new heel loop.

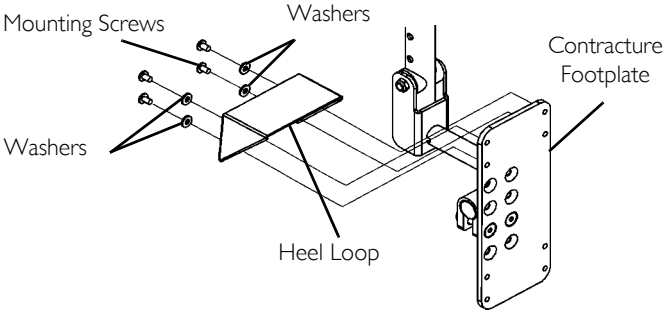

FIGURE 8 Replacing the Contracture Footplate Heel Loop

19 Annex A - RESNA Test Data

19.1 Disclosure

RESNA INFORMATION	SOLARA 3G		SPREE 3G	
	Minimum	Maximum	Minimum	Maximum
MAXIMUM OCCUPANT MASS:	300 lbs		200 lbs	
STATIC STABILITY: FORWARD - WHEELS UNLOCKED: REARWARD - WHEELS UNLOCKED: ANTI-TIP WHEELS UNLOCKED: SIDEWAYS - WHEELS UNLOCKED:	 30° 18° 6° 28°	 30° 30° 25° 30°	 28° 14° 22° 26°	 30° 30° 30° 26°
OVERALL LENGTH:	50.6 inch		48.4 inch	
OVERALL WIDTH:	33.1 inch		27.0 inch	
HANDGRIP HEIGHT:	42.9 inch		42.5 inch	
STOWAGE LENGTH:	43.7 inch		43.3 inch	
STOWAGE WIDTH:	31.3 inch		25 inch	
STOWAGE HEIGHT:	34.3 inch		26 inch	
RISING (WHEELCHAIR WITH ANTI-TIPPERS):	4.3 inch		3.8 inch	
TOTAL MASS:	108 lbs		94.8 lbs	
MASS OF HEAVIEST PART:	92.6 lbs		69.5 lbs	

19 ANNEX A - RESNA TEST DATA

RESNA INFORMATION	SOLARA 3G		SPREE 3G	
	Minimum	Maximum	Minimum	Maximum
PIVOT WIDTH:	NA		NA	
REVERSING WIDTH:	NA		NA	
TURNING DIAMETER:	76.4 inch		69.3 inch	
GROUND CLEARANCE:	7.1 inch		7.2 inch	
REQUIRED WIDTH OF RIGHT ANGLED CORRIDOR:	45.9 inch		40.6 inch	
REQUIRED DOORWAY ENTRY DEPTH:	63.0 inch		48.6 inch	
REQUIRED CORRIDOR WIDTH FOR SIDE OPENING:	N/A		44.1 inch	
SEAT PLANE ANGLE:	0° - 48°		2° - 48°	
EFFECTIVE SEAT DEPTH:	24.2 inch		20.1 inch	
EFFECTIVE SEAT WIDTH:	26 inch		20.3 inch	
SEAT SURFACE HEIGHT AT FRONT EDGE:	18.9 inch		18.9 inch	
BACK SUPPORT ANGLE:	10°	74°	10°	74°
BACK SUPPORT HEIGHT:	21.1 inch		22 inch	
FOOT SUPPORT TO SEAT:	11.2 inch	16.5 inch	11.2 inch	16.5 inch
LEG TO SEAT SURFACE ANGLE:	118°		118°	

RESNA INFORMATION	SOLARA 3G		SPREE 3G	
	Minimum	Maximum	Minimum	Maximum
ARM SUPPORT HEIGHT:	9.3 inch	13.3 inch	9.3 inch	13.3 inch
FRONT ARM SUPPORT TO BACK SUPPORT DISTANCE:	14.2 inch	18.3 inch	14.2 inch	18.3 inch
PROPELLING WHEEL DIAMETER:	15.4 inch		15.4 inch	
HORIZONTAL LOCATION OF AXLE:	0 inch		0 inch	

Section 8 requirements and test methods for static, impact and fatigue strengths: PASS

Section 16 requirements for resistance to ignition: PASS

Notes

Notes

Invacare Corporation

Part No 1154295 Rev E-01 - 1/28/16

Making Life's Experiences Possible™

Yes, you can.®