Invacare® | MyOn HC

INVACARE Yes, you can.

Date:_____ Account Number:_____ PO#:_____ ○ Quote ○ Order

Company Name:_____ Contact Name:_____

Address:_____ City:_____ State:_____

Zip Code:_____ Email:_____

Phone:_____ Marked For: _____

HCPCS codes are not intended to be, nor should be considered as billing advice. Providers are responsible for determining the appropriate billing codes when submitting claims to the Medicare Program and should consult an attorney or other advisor to discuss specific solutions in further detail.

Part No.	Description	HCPCS	Retail
● **MYONHC**	**Lightweight High Performance Folding Frame – Weight Limit 290 lbs.**	*K0005*	**STD**
FRAME TYPE – Choose Swing-Away or Fixed Front Frame			
○ **HCSWNG**	**Swing-Away Front Frame**	*K0005*	**$2065**
Note: Not with FXTD or FXL.			
○ **HCFXD**	**80 Degree Fixed Front Frame**	*K0005*	**$2065**
Note: Not with SAXS, SAS, SASTD or SAL.			
SEAT WIDTH			
○ **W12**	**12" Wide**		**NC**
Note: Weight Limit up to 220 lbs. Not with HPELVSWING, AMPSPTR, or SAXS.			
○ **W13**	**13" Wide**		**NC**
Note: Weight Limit up to 220 lbs. Not with HPELVSWING, AMPSPTR, or SAXS.			
○ **W14**	**14" Wide**		**NC**
Note: Not with HPELVSWING or AMPSPTR.			
○ **W15**	**15" Wide**		**NC**
Note: Not with HPELVSWING or AMPSPTR.			
○ **W16**	**16" Wide**		**NC**
Note: Not with HPELVSWING or AMPSPTR.			
○ **W17**	**17" Wide**		**NC**
○ **W18**	**18" Wide**		**NC**
○ **W19**	**19" Wide**		**NC**
○ **W20**	**20" Wide**	*E2201*	**$ 500**
Note: Not with D14, D15, or SDR1416-15			
○ **W21**	**21" Wide**	*E2201*	**$ 500**
Note: Not with D14, D15, or SDR1416-15			
SEAT DEPTH			
○ **D14**	**14" Deep**		**NC**
Note: Not with W20, W21, HPELVSWING, AT99, 6COMUR, 625COMPNEU, 638ALUSR, 725COMSR, ACG4 or ACG3.			
○ **D15**	**15" Deep**		**NC**
Note: Not with W20, W21, AT99, or ACG4.			
○ **D16**	**16" Deep**		**NC**
○ **D17**	**17" Deep**		**NC**
○ **D18**	**18" Deep**		**NC**
○ **D19**	**19" Deep**		**NC**
○ **D20**	**20" Deep**	*E2203*	**$ 500**
○ **SDR1416-15**	**14" - 16" Depth Adjustable, Set at 15"**		**NC**
Note: Must use depth adjustable upholstery. Not with W20, W21, NONADJS, AT99, or ACG4.			
○ **SDR1618-17**	**16" - 18" Depth Adjustable, Set at 17"**		**NC**
Note: Must use depth adjustable upholstery. Not with NONADJS.			
○ **SDR1820-19**	**18" - 20" Depth Adjustable, Set at 19"**		**NC**
Note: Must use depth adjustable upholstery. Not with NONADJS.			

FRONT (FSTF) TO REAR (RSTF) SEAT ANGLE TABLE

FSTF vs RSTF	SD 20" COG position				FSTF vs RSTF	SD 19" COG position				FSTF vs RSTF	SD 18" COG position				FSTF vs RSTF	SD 17" COG position			
	Standard - +1"	Medium Active - +2"	Active - + 3"	Very Active + 4"		Standard - +1"	Medium Active - +2"	Active - + 3"	Very Active + 4"		Standard - +1"	Medium Active - +2"	Active - + 3"	Very Active + 4"		Standard - +1"	Medium Active - +2"	Active - + 3"	Very Active + 4"
0	●	●	●	●	0	●	●	●	●	0	●	●	●	●	0	●	●	●	●
1"	●	●	●	●	1"	●	●	●	●	1"	●	●	●	●	1"	●	●	●	●
2"	●	●	●	●	2"	●	●	●	●	2"	●	●	●	●	2"	●	●	●	●
3"	●	●	●	●	3"	●	●	●	■	3"	●	●	■	■	3"	●	■	■	■

FSTF vs RSTF	SD 16" COG position				FSTF vs RSTF	SD 15" COG position				FSTF vs RSTF	SD 14" COG position			
	Standard - +1"	Medium Active - +2"	Active - + 3"	Very Active + 4"		Standard - +1"	Medium Active - +2"	Active - + 3"	Very Active + 4"		Standard - +1"	Medium Active - +2"	Active - + 3"	Very Active + 4"
0	●	●	●	●	0	●	●	●	●	0	●	●	●	●
1"	●	●	●	●	1"	●	●	●	●	1"	●	●	●	●
2"	●	●	●	●	2"	●	●	●	●	2"	●	●	●	●
3"	■	■	■	■	3"	■	■	■	■	3"	■	■	■	■

● Available setting

■ Front to Rear seat angle is too great to allow front caster fork to be set perpendicular (90 degrees) to the floor.

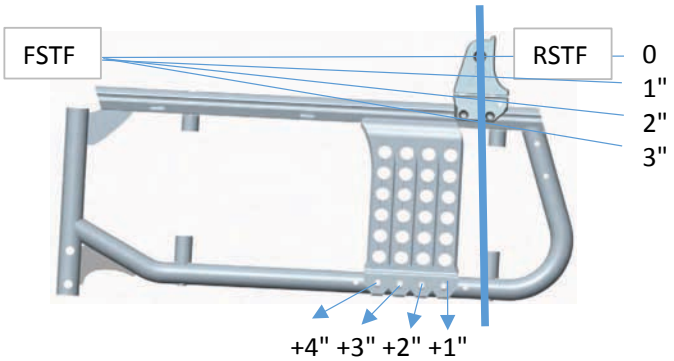

Note: All Specifications and dimensions are approximate. Specifications and prices are subject to change without notice.

Date:_____ PO#_____ Marked For:_____

Part No.	Description	HCPCS	Retail
FRONT SEAT-TO-FLOOR HEIGHT			
FSTF14	14" Front Height		NC
Note: Not with RSTF15, RSTF16, RSTF17, RSTF18, RSTF19, RSTF20, HPELVSWING, SASTD, SAL, 438ALUSR, 5COMUR, 5COMURLU, 538ALUSR, 6COMUR, 625COMPNUE, 638ALUSR, 725COMSR, 25LP, or 25SPOX.			
FSTF15	15" Front Height		NC
Note: Not with RSTF16, RSTF17, RSTF18, RSTF19, RSTF20, HPEL-VSWING, SASTD, SAL, 425COMSR, 475COMUr, 4COMURL, 438ALUSR, 538ALUSR, 6COMUR, 625COMPNUE, 638ALUSR, or 725COMSR.			
FSTF16	16" Front Height		NC
Note: Not with RSTF17, RSTF18, RSTF19, RSTF20, 6COMUR, 625COMPNUE, 638ALUSR, or 725COMSR.			
FSTF17	17" Front Height		NC
Note: Not with RSTF14, RSTF18, RSTF19, RSTF20, or 725COMSR.			
FSTF18	18" Front Height		NC
Note: Not with RSTF14, RSTF15, RSTF19, RSTF20.			
FSTF19	19" Front Height		NC
Note: Not with RSTF14, RSTF15, RSTF19, RSTF20.			
FSTF20	20" Front Height		NC
Note: Not with RSTF14, RSTF15, RSTF16, RSTF17, RSTF18, 425COMSR, 474COMUR, 4COMURL, 438ALUSR, or 5COMUR.			
FSTF21	21" Front Height		NC
Note: Not with D14, D15, RSTF14, RSTF15, RSTF16, RSTF17, 90SA, 425COMSR, 475COMUR, 4COMURL, 438ALUSR, 5COMURLU, 538ALUSR, 6COMUR, 625COMPNEU, or 638ALUSR.			
REAR SEAT-TO-FLOOR HEIGHT			
RSTF14	14" Rear Height		NC
Note: Not with FSTF17 through FSTF21.			
RSTF15	15" Rear Height		NC
Note: Not with FSTF14 & FSTF18 through FSTF21.			
RSTF16	16" Rear Height		NC
Note: Not with FSTF14, FSTF15, FSTF19, FSTF20, or FSTF21.			
RSTF17	17" Rear Height		NC
Note: Not with FSTF14, FSTF15, FSTF16, FSTF20, or FSTF21.			
RSTF18	18" Rear Height		NC
Note: Not with FSTF14, FSTF15, FSTF16, FSTF17, or FSTF21.			
RSTF19	19" Rear Height		NC
Note: Not with FSTF14, FSTF15, FSTF16, FSTF17, FSTF18 , 22CS, 22LP, or 22COM.			
RSTF20	20" Rear Height		NC
Note: Not with FSTF14, FSTF15, FSTF16, FSTF17, FSTF18, FSTF19, 22CS, 22LP, 22COM, 24CS, 24LP, 24COM, or 24SPOX.			
FRAME COLORS			
PEARLWHITE	PEARL WHITE		NC
ANTHRACITEBLACK	ANTHRACITE BLACK		NC
POPBLUE	POP BLUE		NC
DEEPRED	DEEP RED		NC
EXTREMEGREEN	EXTREME GREEN		NC
HYPNOTICPURPLE	HYPNOTIC PURPLE		NC
PEARLGREY	PEARL GREY		NC
MATTEBLACK	MATTE BLACK		NC
INTENSEYELLOW	INTENSE YELLOW		NC
VIBRANTORANGE	VIBRANT ORANGE		NC
ACCENT COLORS			
Note: Includes forks, axle plates, caster housing and axle caps on Lightweight and Spinergy wheels.			
SILAN	Silver Anodized Accents – Standard		STD
BLUEAN	Blue Anodized Accents		NC
PURPAN	Purple Anodized Accents		NC

Part No.	Description	HCPCS	Retail
SEAT UPHOLSTERY			
OSU	Omit Seat Upholstery		NC
STDDAS	Nylon 2" Depth Adjustable		$ 95
NONADJS	Nylon Fixed		NC
Note: Not with SDR1416-15, SDR1618-17, OR SDR1820-19.			
TAS	Tension Adjustable		$ 175
BACKREST			
AAFD	Angle Adjustable Fold Down		STD
Note: From 90º position, adjusts -15º to +15º using 1 tool with driver in the chair.			
FIXED HEIGHT BACKREST – With 7º Back Bend			
12BP4G	12" Back Upholstery with 13" Post with Short 4" Grip		NC
Note: Not with FXBACKUPH or WLATTEND.			
13BP4G	13" Back Upholstery with 13" Post with Short 4" Grip		NC
Note: Not with FXBACKUPH or WLATTEND.			
14BP4G	14" Back Upholstery with 15" Post with Short 4" Grip		NC
Note: Not with WLATTEND.			
15BP55G	15" Back Upholstery with 15" Post with Regular 5.5" in Grip		NC
16BP55G	16" Back Upholstery with 17" Post with Regular 5.5" in Grip		NC
17BP55G	17" Back Upholstery with 17" Post with Regular 5.5" in Grip		NC
18BP55G	18" Back Upholstery with 19" Post with Regular 5.5" in Grip		NC
19BP55G	19" Back Upholstery with 19" Post with Regular 5.5" in Grip		NC
20BP55G	20" Back Upholstery with 21" Post with Regular 5.5" in Grip		NC
ADJUSTABLE HEIGHT BACKREST			
ABH1416	14.5" to 16" Height Adjustable Backrest		NC
ABH1619	16" to 19.5" Height Adjustable Backrest		NC
PUSH HANDLES – For Adjustable Height Backrest			
OPUSHHDL	Omit Pushhandles - Posts Have 7° Bend		NC
HNDL4ADJ	4" Height Adjustable Rearset with 7° Bend		$ 125
Note: Not with FXBACKUPH.			
HNDLADJ57	5" to 7" Telescopic Height Adjustable - Posts Have No Bend		NC
UPHOLSTERY			
OBACKUPH	Omit Back Upholstery		NC
FXBACKUPH	Standard Back Upholstery		NC
Note: Not with 12BP4G, 13BP4G, HNDL4ADJ or FRB.			
ADJBACKUPH	Tension Adjustable Back Upholstery	*E2611*	$ 245
FRONT FRAME HANGERS – For Swing-Away Front Frame			
NORIG	Omit Hangers/Footplates		NC
70SA	70° Swing Away		NC
80SA	80° Swing Away		NC
90SA	90° Swing Away		NC
Note: Not with FSTF21 or COMPFU, 6COMUR or 625COMPNEU.			
HPELVSWING	High Pivot Elevevating Legrests 0° to 80° with Calf Pad	*E0990*	$ 280
Note: Not with W12, W13, W14 or D14, FSTF14, FSTF15, SAXS. All not with CALFSTRAP.			
AMPSPTP	Dual Amputee Supports	*E0959 E1020*	$ 350
AMPSPTP-L	Amputee Support – Left	*E0959 E1020*	$ 175
AMPSPTP-R	Amputee Support – Right	*E0959 E1020*	$ 175
Note: Not with W12, W13, W14, W15, W16 or CRF103.			

Note: All Specifications and dimensions are approximate. Specifications and prices are subject to change without notice.

Date:_____ PO#_____ Marked For:_____

Part No.	Description	HCPCS	Retail
FOOTPLATES			
○ COMPFU	Composite Flip Up with Heel Loop		NC
Note: Not with 90SA or SAS.			
○ COMADFU	Composite Flip Up Depth and Angle Adjustable with Heel Loop	K0040	$ 165
○ OPFU	One Piece Flip Up Depth and Angle Adjustable	K0040	$ 165
Note: Not with HCSWING, SAXS, SAS, SASTD or SAL.			
FOOTREST EXTENSION TUBES – For Swing-Away Front Frame			
○ SAXS	X-Short 14"		NC
Note: Not with HCFXD, W12, W13, HPELVSWING, OPFU or CRF103.			
○ SAS	Short 11" - 15"		NC
Note: Not with HCFXD, COMPFU, or OPFU.			
○ SASTD	Standard 12" - 16.5"		NC
Note: Not with HCFXD, FTSF14, FTSF15 or OPFU.			
○ SAL	Long 12.5" - 18"		NC
Note: Not with HCFXD, FSTF14, FSTF15 or OPFU.			
FOOTREST EXTENSION TUBES – For Fixed Front Frame			
○ FXSTD	Standard 12.5" - 18		NC
Note: Not with HCSWNG.			
○ FXL	Long 14" - 20"		NC
Note: Not with HCSWNG.			
ARMRESTS			
○ AT99	Lift Up Swing Away Padded Tubular	E0973	NC
Note: Not with D14, D15 or SDR1416-15.			
○ HATD	8" - 11" Height Adjustable Removable T-Arm with Desk Length Pad		$ 270
○ HATF	8" - 11" Height Adjustable Removable T-Arm with Full Length Pad		$ 270
○ FBHAD	Flip Back Height Adjustable with Desk Length Pad	E0973	$ 285
○ FBHAF	Flip Back Height Adjustable with Full Length Pad	E0973	$ 285
○ ATHA	Height Adjustable Single Post with Arm Troughs	E0973	$ 340
SIDE GUARDS			
○ SIDEGRDS	Adjustable Removeable	K0108	$ 130
Note: Not with Flip Back Arms or T-Arms.			
○ SIDEGRDS-FDR	Carbon Style Non Adjustable Removeable Side Guards with Fenders	K0108	$ 160
Note: Not with Flip Back Arms or T-Arms or WLATTEND.			
SEATING OPTIONS			
○ TSC	Folded Frame Connector Strap (Keeps frame folded when lifting)		$ 50
○ CALFSTRAP	Calf Strap	K0038	$ 35
Note: Not with HPELVSWING.			
○ FRB	Foldable Rigidizing Bar	K0108	$ 150
Note: Not with FXBACKUPH.			

Part No.	Description	HCPCS	Retail
FRONT CASTERS			
○ 425COMSR	4" x 1 1/4" Composite Soft Roll		$ 75
Note: Not with FTSF15, FTSF20 or FTSF21.			
○ 475COMUR	4" x 3/4" Composite Urethane		NC
Note: Not with FTSF15, FTSF20 or FTSF21.			
○ 4COMURLU	4" Composite Urethane Light Up		$ 75
Note: Not with FTSF15, FTSF20 or FTSF21.			
○ 438ALUSR	4" x 1 3/8" Aluminum Soft Roll		$ 175
Note: Not with FTSF14, FTSF15, FTSF20 or FTSR21.			
○ 5COMUR	5" x 1" Composite Urethane		NC
Note: Not with FTSF14 or FTSF21.			
○ 5COMURLU	5" Composite Urethane Light Up		$ 75
Note: Not with FTSF14 or FTSF21.			
○ 538ALUSR	5" x 1 3/8" Aluminum Soft Roll		$ 175
Note: Not with FTSF14, FTSF15 or FTST21.			
○ 6COMUR	6" x 1" Composite Urethane		NC
Note: Not with D14, FTSF14, FTSF15, FTSF16, FTSF21 all 90SA.			
○ 625COMPNEU	6" x 1 1/4" Composite Pneumatic		$ 75
Note: Not with D14, FTSF14, FTSF15, FTSF16, FTSF21 all 90SA.			
○ 638ALUSR	6" x 1 3/8" Aluminum Soft Roll		$ 175
Note: Not with D14, FTSF14, FTSF15, FTSF16, FTSF21 all 90SA.			
○ 725COMSR	7" x 1 1/4" Composite Soft Roll		$ 175
Note: Not with D14, FTSF14, FTSF15, FTSF16, FTSF17, FTSF21 all 90SA.			

FRONT SEAT TO FLOOR HEIGHT (FSTF)

Fork Type:		14"	15"	16"	17"	18"	19"	20"	21"
Front wheel size	4"	UL1		S2 ⚠	S4	L3	L2 +		
	5"		UL 2	S1 ⚠	S3	L2	L1 +	L3 +	
	6"				S2	S4	L3	L2 +	
	7"					S3	L2	L1 +	L3 +

⚠ Be aware: ONLY 5/8" between floor and fork.

Spacer is added to achieve height

FRONT CASTER AND FRONT SEAT TO FLOOR HEIGHT (FSTF)

Caster Size	14"	15"	16"	17"	18"	19"	20"	21"
4"	○	○	○	○	○	○		
5"		○	○	○	○	○	○	
6"				○	○	○	○	
7"					○	○	○	○

Table - Wheels , Handrim & Tire combinations

	TIRE TYPE	22" Cross Spoked	24" Cross Spoked	22" Composite Mag	24" Composite Mag	22" Lightweight Perf.	24" Lightweight Perf.	25" Lightweight Perf	24" Spinergy SPOX	25" Spinergy SPOX
		STANDARD				PERFORMANCE				
UR38	SOLID URETHANE, LIGHT TREAD 1-3/8" - GRAY	○	○	○	○	○	○			
PNEU38	PNEUMATIC TREADED 1-3/8" - GRAY	○	○	○	○	○	○			
PNEUHP	PNEUMATIC HIGH PERF. (PRIMO) 1" - GRAY/BLACK	○	○			○	○	○	○	○
SMP	SCHWALBE MARATHON PLUS EVO 1" BLACK						○	○	○	○
PNEUFF	PNEUMATIC FLAT FREE INSERTS 1-3/8"			○	○					
	HANDRIM TYPE									
ALUMHR	ANODIZED ALUMINIUM HANDRIM	○	○	○	○	○	○	○	○	○
ANTISLPHR	ANTI-SLIP, PLASTIC COATED - BLACK	○	○	○	○	○	○	○	○	

REAR WHEEL AND REAR SEAT TO FLOOR HEIGHT (RSTF)

Wheel Size	14"	15"	16"	17"	18"	19"	20"	21"
22"	○	○	○	○	○			
24"	○	○	○	○	○	○		
25"		○	○	○	○	○	○	○

Note: All Specifications and dimensions are approximate. Specifications and prices are subject to change without notice.

Date:_____ PO#_____ Marked For:_____

Part No.	Description	HCPCS	Retail
REAR WHEEL			
22CS	22" Cross Spoked		NC
Note: Not with RTSF19, RTSF20, PNEUHP or SMP.			
22LP	22" Lightweight Performance		$ 200
Note: Not with RTSF19, RTSF20, PNEUHP or SMP.			
22COM	22" Composite		NC
Note: Not with RTSF19, RTSF20, PNEUHP or SMP.			
24CS	24" Cross Spoked		NC
Note: Not with RTSF20 or SMP.			
24LP	24" Lightweight Performance		$ 200
Note: Not with RTSF20.			
24COM	24" Composite		NC
Note: Not with RTSF20, PNEUHP or SMP.			
24SPOX	24" Spinergy SPOX		$ 795
Note: Not with RTSF20, UR38 or PNEU38.			
25LP	25" Lightweight Performance		$ 200
Note: Not with RTSF14, UR38, PNEU38 or PNUEHP.			
25SPOX	25" Spinergy SPOX		$ 795
Note: Not with RTSF14, UR38, PNEU38 or PNUEHP.			
REAR TIRE			
UR38	Solid Urethane Lightly Treaded 1 3/8" - Grey		NC
Note: Not with 24SPOX, 25LP or 25SPOX.			
PNEU38	Pneumatic Treaded 1 3/8 - Grey		NC
Note: Not with 24SPOX, 25LP or 25SPOX.			
PNEUHP	Pneumatic Hign Performance (Primo) Grey/Black Side		$ 98
Note: Not with 22CS, 22LP, 22COM, 24COM, 25LP or 25SPOX.			
SMP	Schwalbe Marathon Plus - Black	E2213	$ 125
Note: Not with 22CS, 22LP, 22COM, 24CS or 24COM.			
PNEUFF	Pneumatic Flat Free Inserts	E2213	$ 89
Note: Not with 22CS, 22LP, 24CS, 24LP, 24SPOX, 25LP or 25SPOX.			
HANDRIM			
ALUMHR	Annodized Aluminum Handrim		NC
ANTISLPHR	Anti-Slip Plastic Coated Black.		$ 95
SPKPRT	Spoke Protectors 22" and 24"	K0065	$ 115
Note: 22" Clear for all rear wheels except 24CS. 24" Black for 24CS only.			
PUMP	Tire Pump		$ 45
HPPUMP	High Pressure Tire Pump		$ 55
REAR WHEEL POSITION – Center of Gravity Setting			
Note: 0° is back post location. ACG3 and ACG4 may be tippy and recommend for experienced drivers only.			
ACG1	Standard Wheel Position		NC
Note: Wheel in "Standard" position is 1" in front of backpost and is considered to be the most stable position.			
ACG2	Medium Active Wheel Position		NC
Note: Wheel in "Medium Active" position is 2" in front of backpost.			
ACG3	Active Wheel Position		NC
Note: Wheel in "Active" position is 3" in front of backpost. Not available with D14.			
ACG4	Very Active Wheel Position		NC
Note: Wheel in "Very Active" position is 4" in front of backpost. Not available with D15, or SDR1416-15.			

Part No.	Description	HCPCS	Retail
REAR WHEEL CAMBER			
Note: All MyOn HC chairs include 4° degrees of available camber. Some camber changing components are packaged seperately.			
C00	0° Camber		NC
C01	1° Camber		NC
C02	2° Camber		NC
C03	3° Camber		NC
C04	4° Camber		NC
QUICK RELEASE AXLES			
A1577	Quick Release Axle		STD
WHEEL LOCKS			
PUSHLOCK	Push to Lock Wheel Locks		NC
PULLOCK	Pull to Lock Wheel Locks		NC
PUSHLOCKX	Push To Lock w/ Extension	E0961	$ 65
PULLOCKX	Pull To Lock w/ Extension	E0961	$ 65
WLATTEND	Hand Activated Brake and Wheel Lock System	E2228	$1000
Note: Not with 12BP4G, 13BP4G, 14BP4G or SIDEGRDS-FDR.			
Note: For 24CS only. Push handles must be selected. Wheels are quick release.			
ANTI TIPPERS			
ATIP-R	Spring Loaded Anti-Tipper - Right	E0971	$ 75
Note: Attendant or driver activated.			
ATIP-L	Spring Loaded Anti-Tipper - Left	E0971	$ 75
Note: Attendant or driver activated.			
SAFETY OPTIONS			
TIPAIDL	Curb Assist Tipping Aid - Left		$ 50
Note: Push handles must be selected.			
TIPAIDR	Curb Assist Tipping Aid - Right		$ 50
Note: Push handles must be selected.			
A1515	Push Button Pelvic Positioning Belt	E0978	$ 70
ACCESSORY OPTIONS			
A1569	Crutch and Cane Carrier	E2207	$ 175
Note: Not with HNDL4ADJ.			
CRF103	Luggage Carriers - Pair		$ 95
Note: For swing away front frame, footrest hangers must be selected.			
Note: Not with with AMPSPTP Pair, Right or Left or SAXS.			
TOOLKIT	Tool Kit		$ 45
SWREFL	Spoke Wheel Reflectors		$ 49
Note: Not with 22COM or 24COM.			

INVACARE Yes, you can.

Motion Concepts · TOP END · FREEDOM Our kids are our passion. · pin-dot · ASL · alber · matrx

Note: All Specifications and dimensions are approximate. Specifications and prices are subject to change without notice.