LEVO active-easy LAE

The high performance manual wheelchair with standing technology

LEVO active-easy LAE

LEVO stands for a better quality of life

LEVO
THE EXPERTS IN STANDING

At eye level with life

This is LEVO: The touch of a lever elevates you to a safe, comfortable standing position to interact with your active life. At work, in school or at home, LEVO standing wheelchairs, offer exactly what you need: Independence, Mobility, Support, Health and Quality.

Each wheelchair is designed from the experience of more than 30 years of research, development and client response. LEVO is proud to offer wheelchairs that combine seating and standing positions matched to your unique biomechanical dynamics with superior maneuverability, size, weight, aesthetics and adjustability. All models are reviewed and certified by internationally approved testing institutes.

LEVO active-easy LAE

Versatile, active, choice

You have an active life and want a wheelchair that keeps up with you and meets your demands. No matter the place or situation, the LEVO LAE guarantees you maximum mobility and response with its advanced action radius. Add the opportunity to sit, stand or position at all the angles in between and you are ready to elevate at work, sit for dinner or join your friends at the bar. With the LEVO LAE you choose the extent – and level – of participation.

Wheelchair characteristics

- Agile, active. Quick response
- Excellent driving characteristics indoor and outdoor
- Convenient quick release rear wheels, front castors and a folding backrest make for easy vehicle transport
- Simple and fast adjustment for individual preferences
- Accessories to build your personalized chair

Seating and Standing design

- Complete standing position up to 85°
- Sit, Stand – and anywhere in between
- Six ground stability points ensure solid and secure standing position
- Gas springs move you to controlled positioning through easy one hand operation
- Optimal and matched body mechanics in all seating and standing positions
- Numerous medical benefits because of more frequent standing

Use the LEVO LAE everywhere, every day

LEVO Stands for a better quality of life

Highlights

- Smooth standing and positioning movement
- Excellent driving characteristics
- Easy and safe to handle
- Transport friendly
- Aluminum light weight
- Adjustable for upper and lower leg length, foot position and back height
- Seat width from 13.8 – 18.9 in
- Seat depth up to 21.3 in
- User weight up to 265 lbs
- Multiple color options
- Certificates: TÜV, CERAH, HI, FDA/510(k), Crash Test

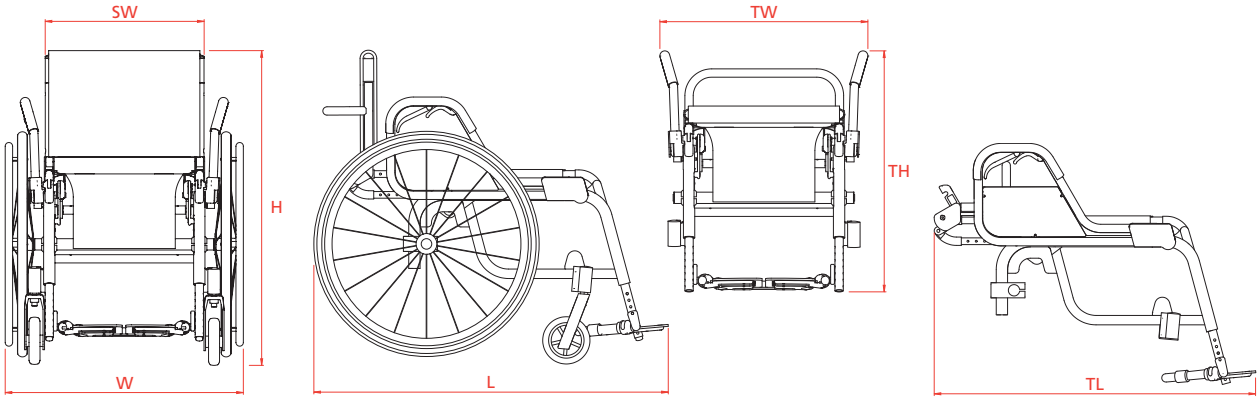

Technical Data

Model	S – M	L – XL
Seat width (SW)	13.8/15/15.7/16.5/17.7/18.9	
Total width (W)	22.4/23.6/24.4/25.2/26.4/27.3	
Total length (L)	33.1–35.5	36.6–41
Total height (incl. backrest) (H)	31.5	
Backrest upholstery height min.	12.2	
Seat upholstery height front	19/20.1/21.2/22.4	
Seat upholstery depth	11.4–16.5	17–22.4
Footrest	height and angel adjustable	
Total weight (without removable parts)	40 (28)	
Rear wheels	22"/24"/26"	
Transport dimensions max. (TL x TW x TH)	38.6 x 25.2 x 19.7	

All measurements in inch and pound. Discrepancies in the measurements may arise due to wheelchair modifications.

Options/Accessories

Foam seat cushion
Anti-tip rollers
Tip aid
Backrest extension
Push handles
Push handle extension
Spinergy wheels
Camber
Spoke guard
V-Trak back
… many more on request

Colors

5 standard colors (blue, red, yellow, platinum, black) and 190 other color options