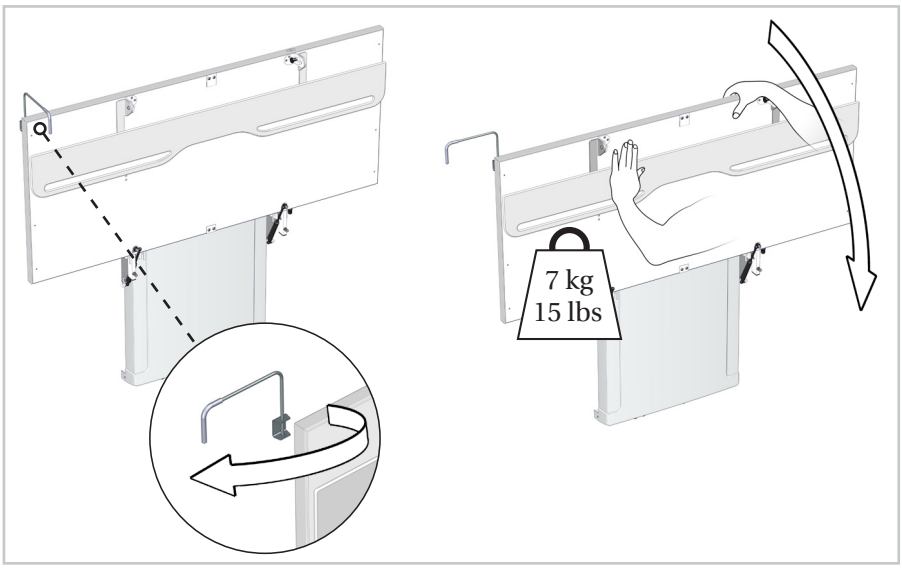

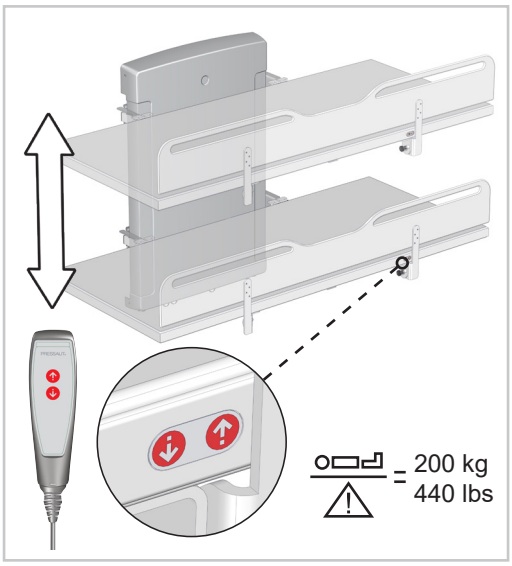

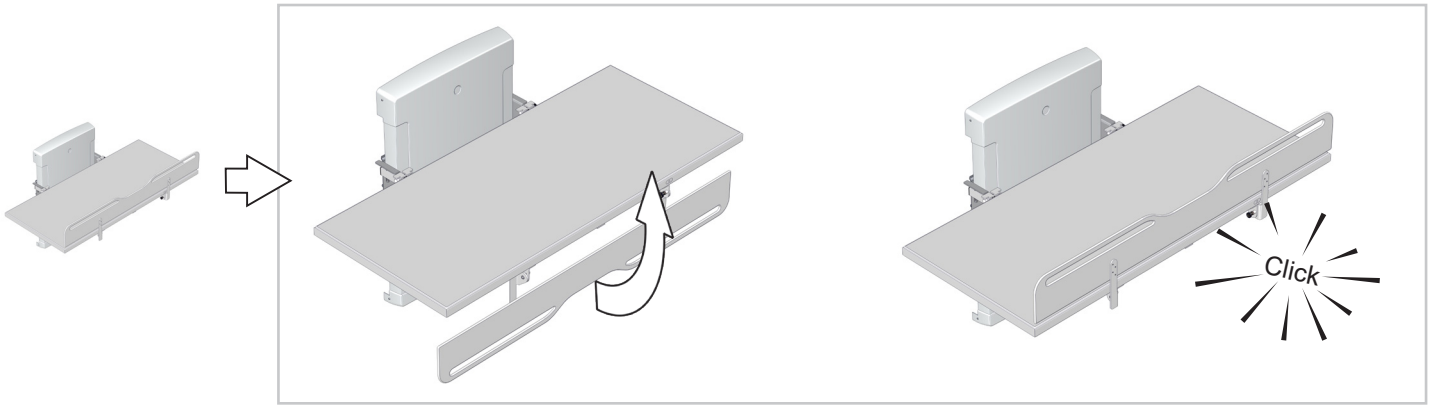

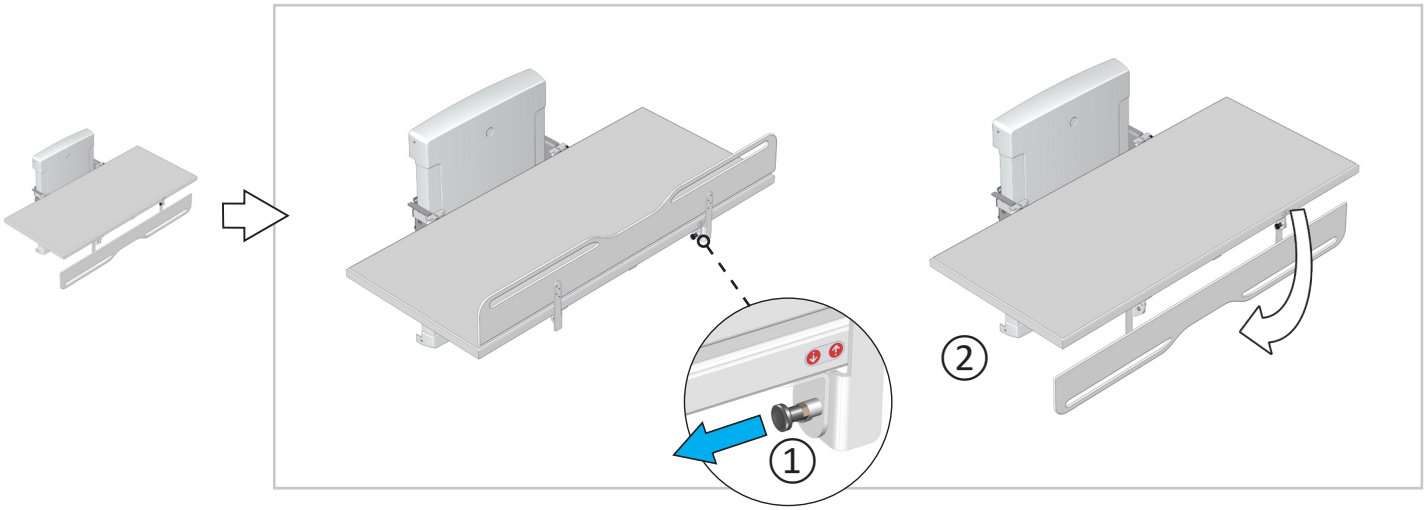

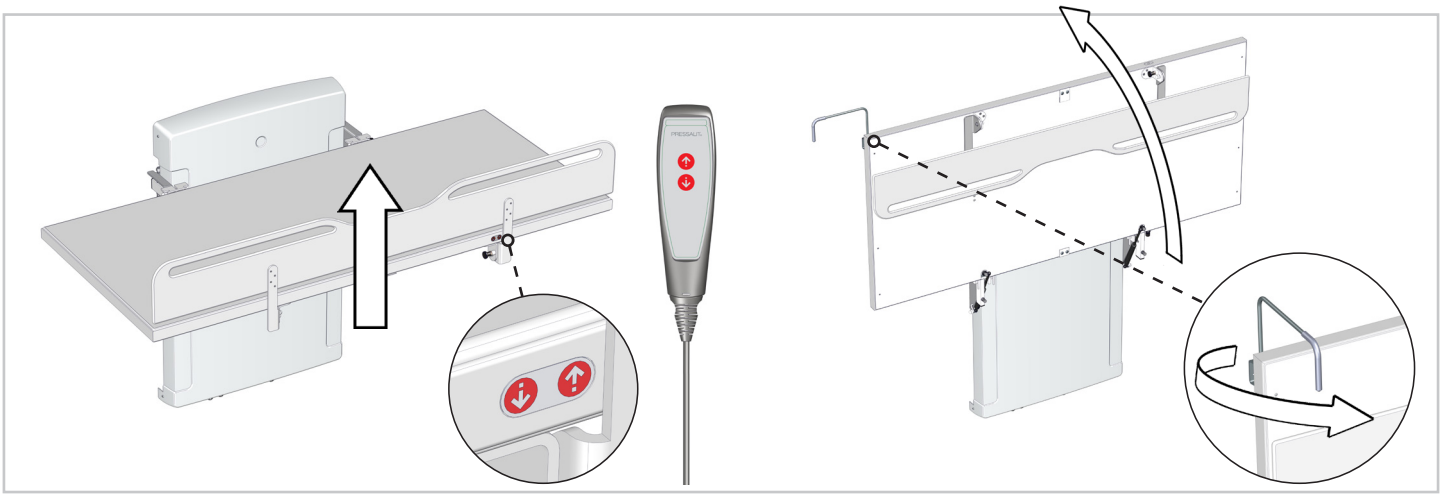

R8574 - R8584 - R8594

V5384 (V5323) Version 1.0 2019-05