PROTEKT® ONYX
HYDRAULIC PATIENT LIFT

OWNERS MANUAL & INSTRUCTIONS

Proactive
medical products

SAFETY SUMMARY

WARNING!

Check all parts for shipping damage before using. In case of damage, do NOT use the equipment. Contact the Dealer for further instructions.

The Proactive Medical patient lift is **NOT** a transport device. It is intended to transfer an individual from one resting surface to another (such as a bed to a wheelchair). Moving a person suspended in a sling over ANY distance is NOT recommended.

DO NOT attempt any transfer without approval of the patient's physician, nurse or medical attendant. Thoroughly read the instructions in this Owner's Manual, observe a trained team of experts perform the lifting procedures and then perform the entire lift procedure several times with proper supervision and a capable individual acting as a patient.

Use common sense in all lifts. Special care **MUST BE** taken with physically challenged individuals who cannot cooperate while being lifted. Use restraint straps if necessary.

Proactive Medical slings and patient lift accessories are specifically designed to be used in conjunction with Proactive Medical patient lifts. Slings and accessories designed by other manufacturers are not to be utilized as a component of Proactive Medical's patient lift system. Use of these products is prohibited and will void Proactive Medical 's patient lift warranty. Use only genuine Proactive Medical slings and lift accessories to maintain patient safety and product utility.

Use a sling that is recommended by the individual's doctor, nurse or medical attendant for the comfort and safety of the individual being lifted.

DO NOT use any kind of plastic back incontinence pad or seating cushion between the patient and sling material that may cause the patient to slide out of the sling during a transfer.

When using an adjustable base lift, the legs **MUST BE** in the maximum **OPENED/LOCKED** position **BEFORE** lifting the patient.

Before transferring a patient from a stationary object (wheelchair, commode or bed), slightly raise the patient off the stationary object and check all sling hardware for secure attachment to include swivel bar, straps, S-hooks and D or O-rings. If any attachment is not correct, lower the patient and correct the problem, then raise the patient and check again.

During transfer, with patient suspended in a sling attached to the lift, **DO NOT** roll caster base over objects such as carpets, raised carpet bindings, door frames, or any uneven

surfaces or obstacles that would create an imbalance of the patient lift and could cause the patient lift to tip over. Use steering handles on the mast at **ALL** times to push or pull the patient lift.

After the first 12 months of operation, inspect the swivel bar and the boom (to which it attaches) for wear. If the metal is worn, the parts **MUST** be replaced. Make this inspection every three (3) months thereafter.

The hydraulic pump is sealed at the factory and if service is required, the pump unit **MUST BE** returned to the factory for repair. **DO NOT** attempt to open the hydraulic pump or obtain local service as this will VOID the warranty and may result in damage and a costly repair. Consult your Dealer or Proactive Medical for further information.

Casters and axle bolts require inspection every six (6) months to check for tightness and wear.

Regular maintenance of the patient lift and accessories is necessary to assure proper operation.

DO NOT exceed maximum weight limitation of the patient lift. These suggested weight limitations will vary from 300 to 450 lbs. depending on the type of patient lift purchased. Refer to the **SPECIFICATIONS** in this Owner is Manual for maximum weight limitation.

SPECIFICATIONS

Item#	32475
Base Width (Inches) OPEN: CLOSED:	 42.25 22.00
Base Height (inches) (Clearance):	5.25
Base Length: (inches)	40.5
Boom Height at Sling Attachment: (inches) Min: Max: Range:	 17.00 61.00 44.00
Boom Overall Height:	73.00
Weight Capacity: (lbs.)	450
Caster Size: (Inches)	5.00
Weight: (Unit in carton)	85 lbs.

FEATURES

Hydraulic pump suggested operating limit is 450 lbs. Masts are interchangeable with bases. Lock together. Can be separated for storage.

Operation optimizes lift capabilities. Requires less physical effort for raising patient.

Offset mast and boom style provides better lift path. Maximizes full travel range. Pump handle can rotate from side-to-side for convenience of attendant.

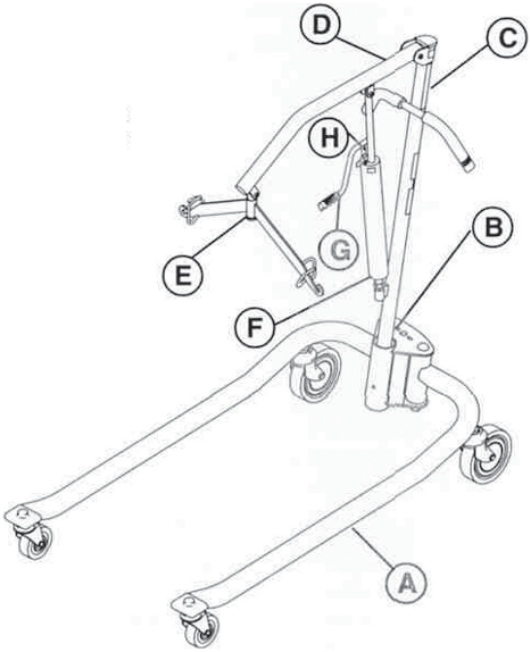

A. The Caste red Base
B. The Shifter Handle
C. The Mast
D. The Boom
E. Swivel Bar
F. Hydraulic Pump
G. Pump Handle
H. Control Valve

FEATURES (CONT.)

ADJUSTABLE BASE

Uses 5-inch casters in rear and 5-inch casters in front.
Opens legs from 22 to 42-1/4-inches.

FEATURES (CONT.)

PATIENT SLINGS

WARNING

Use a sling that is recommended by the individual's doctor, nurse or medical attendant for the comfort and safety of the individual being lifted.

Patient slings work in conjunction with lifts to support the patient during lifting and transferring procedures.

Slings attach to the lift by using either sewn-in loop straps, chains or adjustable straps.

Each sling offers reinforcing at each hook-on point to ensure patient safety.

Each sling is constructed of durable materials which resist deterioration from exposure to moisture or laundering.

Standard Slings

ITEM #	DESCRIPTION
30137	Standard seat/back sling - Canvas 330 lb. weight capacity
30138	Standard seat/back sling w/commode opening - Canvas 330 lb. weight capacity
30132	Standard seat/back sling - Nylon 330 lb. weight capacity
30133	Standard seat/back sling w/commode opening - Nylon 330 lb. weight capacity

The one-piece contour sling can be used on heavy or light patients. Supports patient from shoulders to the knees. Used for weighing, transferring or to simplify the use of bathroom facilities.

FEATURES (CONT.)

Full Body Mesh Slings

ITEM #	DESCRIPTION
30110 *Medium*	Mesh full body: medium 600 lb. weight capacity
30111 *Large*	Mesh full body: large 600 lb. weight capacity
30124 *X-Large*	Mesh full body: X-large 600 lb. weight capacity
30118 *XX-Large*	Mesh full body: XX-large 600 lb. weight capacity

Full Body Mesh Slings w/Commode

ITEM #	DESCRIPTION
30114 *Medium*	Mesh full body: medium w/commode opening 600 lb. weight capacity
30115 *Large*	Mesh full body: large w/commode opening 600 lb. weight capacity
30116 *X-Large*	Mesh full body: X-large w/commode opening 600 lb. weight capacity
30119 *XX-Large*	Mesh full body: XX-large w/commode opening 600 lb. weight capacity

Full Body Solid Slings

ITEM #	DESCRIPTION
30112 *Medium*	Solid fabric full body: medium 600 lb. weight capacity
30113 *Large*	Solid fabric full body: large 600 lb. weight capacity
30117 *X-Large*	Solid fabric full body: X-large 600 lb. weight capacity
30123 *XX-Large*	Solid fabric full body: XX-large 600 lb. weight capacity

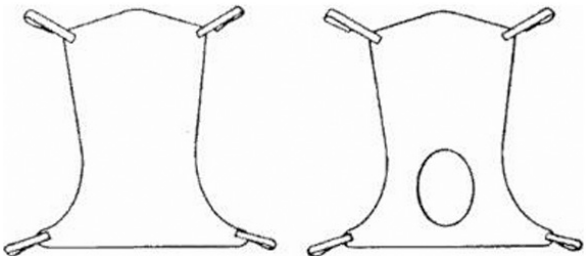

FEATURES (CONT.)

Divided leg design is best suited for high level spinal cord injuries or patients where sling removal is more difficult. Support ranges from the upper back to beneath the thighs. Can be positioned with patient seated. Greatly simplifies the use of bathroom facilities.

Divided Leg Slings

ITEM #	DESCRIPTION
30100P *Small*	Solid divided leg: small 450 lb. weight capacity
30100 *Medium*	Solid divided leg: medium 450 lb. weight capacity
30101 *Large*	Solid divided leg: large 450 lb. weight capacity
30102 *X-Large*	Solid divided leg: X-large 450 lb. weight capacity
30103 *XX-Large*	Solid divided leg: XX-large 600 lb. weight capacity

Padded Divided Leg Slings w/o Head Support

ITEM #	DESCRIPTION
30100P-NHS *Small*	Solid padded divided leg w/o head support: small 600 lb. weight capacity
30100-NHS *Medium*	Solid padded divided leg w/o head support: medium 600 lb. weight capacity
30101-NHS Large	Solid padded divided leg w/o head support: large 600 lb. weight capacity
30102-NHS *X-Large*	Solid padded divided leg w/o head support: X-large 600 lb. weight capacity

Padded Divided Leg Slings w/Head Support

ITEM #	DESCRIPTION
30100P-HS *Small*	Solid padded divided leg w/head support: small 600 lb. weight capacity
30100-HS *Medium*	Solid padded divided leg w/head support: medium 600 lb. weight capacity
30101-HS Large	Solid padded divided leg w/head support: large 600 lb. weight capacity
30102-HS *X-Large*	Solid padded divided leg w/head support: X-large 600 lb. weight capacity

HANDLING PROCEDURES

SHIPPING AND TRANSPORTATION INSTRUCTIONS

If the Patient Lift is to be reshipped by common carrier, it should be packed in the same carton. Extra cartons are available from Proactive Medical.

UNPACKING

1. Check for any obvious damage to the carton or its contents. If damage is evident, notify Carrier/ Proactive Medical Dealer.
2. Remove all loose packing from the carton.
3. Carefully remove all the components from the carton.

NOTE: Unless the Patient Lift is to be used immediately, retain boxes, containers and packing material for use in storing until use of the Patient Lift is required.

INSPECTION

1. Examine exterior of the Patient Lift for nicks, dents, scratches or damages. Inspect all components.

STORAGE

1. Store the repackaged Patient Lift in a dry area.
2. DO NOT place other objects on top of the repackaged Patient Lift.

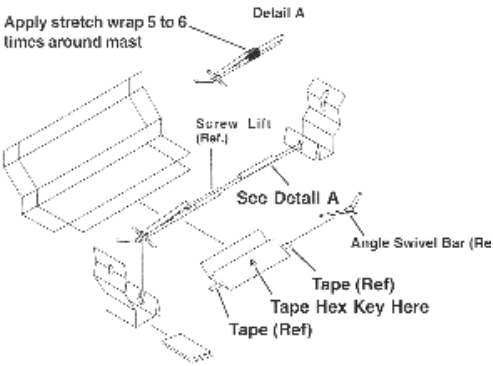

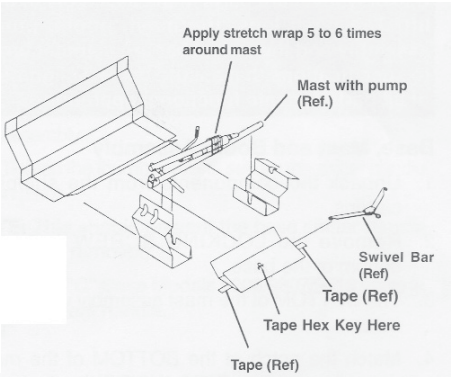

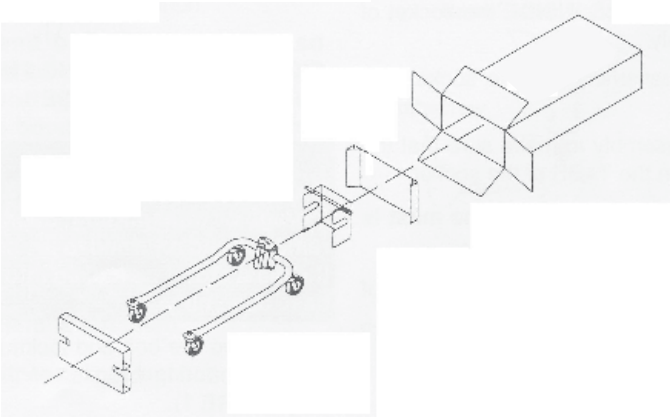

ASSEMBLY

WARNING!

Use only Proactive Medical parts in the assembly of this lift. The base legs, the mast, boom, pump assembly and the swivel bar are manufactured to specifications that assure correct alignment of all parts for safe functional operation.

BASE, MAST AND BOOM ASSEMBLY

1. Unpack the components from the shipping cartons.
2. Remove the LOCKING SCREW from the bottom of the base.
3. The BOTTOM of the mast assembly will have a notch.
4. Match the notch at the BOTTOM of the mast assembly with the TABS INSIDE the socket of the base assembly.
5. Insert the mast assembly into the socket and onto the TABS.
6. Turn the mast assembly to make sure that the notch is locked on the TABS of the socket.

NOTE: If the mast DOES NOT turn, the mast is centered and locked in place.

7. Insert the LOCKING SCREW into the bottom of the base and securely tighten.

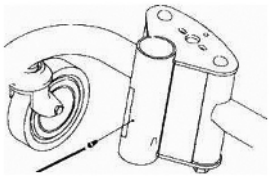

Locking Screw

Bolt and Lockout

Bottom of mast notch

Top inside of the Socket of the Base assembly

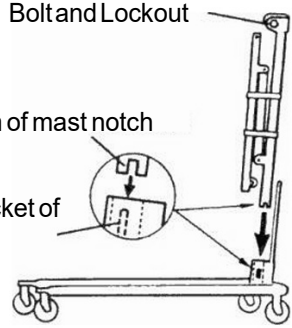

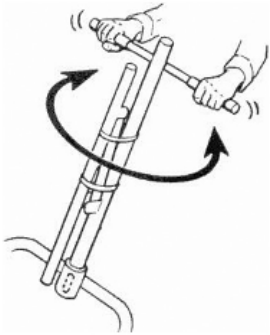

Fig. 1 - Assembling the mast to the base

ASSEMBLY (CONT.)

WARNING!
The mast may be removed from the base for storage or transporting. Each time the mast is removed and returned to the socket of the base, the mast MUST be locked into the socket of the base assembly.

8. Remove the bolt and lock nut from the TOP of the mounting bracket of the mast assembly.

9. Align the holes of the boom assembly and mast assembly mounting bracket. Insert the bolt completely through the holes of the mast assembly mounting bracket and the boom assembly.

NOTE: Be sure that the bolt is completely through the holes of the mast assembly mounting bracket and boom assembly; and they are not riding on the shoulder of the bolt.

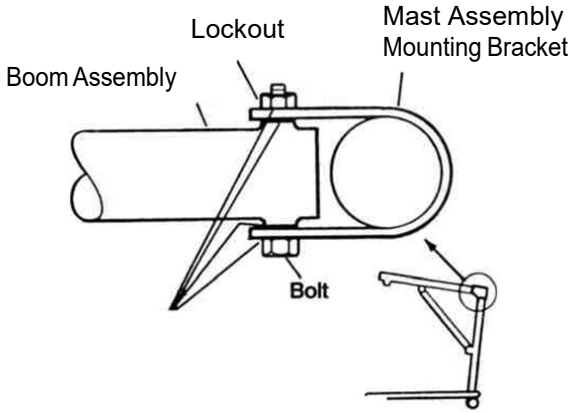

Mast Assembly

CAUTION: The boom and mast when assembled MUST pivot easily.

10. Tighten the bolt and nut using the Allen wrench provided and an adjustable wrench.

NOTE: The nut and bolt can be tightened completely and the boom assembly will pivot easily if the mounting hardware is aligned properly when the boom assembly is secured to the mast. To check for correct alignment of the hardware, use the Allen wrench provided and turn the bolt by hand (it should rotate without a lot of force being applied). If excessive force is necessary, the bolt is NOT aligned properly. Disassemble and repeat assembly procedures until proper alignment is obtained.

ASSEMBLY (CONT.)

11. To check for tightness of nut and bolt:

a. Raise the boom assembly.

b. Push the control handle away from the pump assembly.

c. If the boom assembly pivots easily, then the nut and bolt are NOT too tight.

d. If the boom assembly does not pivot easily or does not pivot at all, then the nut and bolt are NOT aligned properly.

Base Shifter Handle Assembly

1. Insert the base shifter handle into the cam lock assembly at the back of the base.
2. Align the holes of the shifter handle and cam lock assembly.
3. Tighten the thumb screw to secure the shifter handle in place.

NOTE: This should prevent the base shifter handle from being removed.

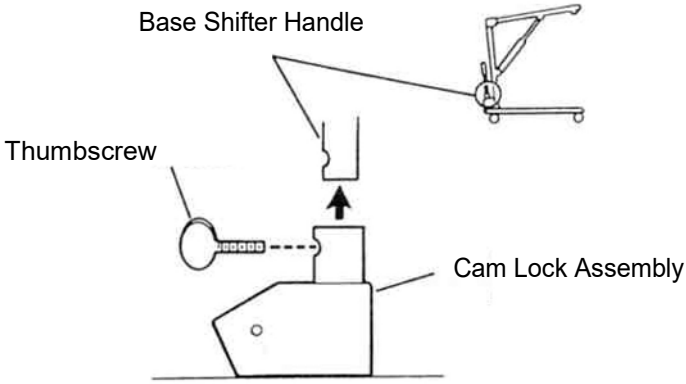

SHIFTER HANDLE INSTALLATION

ASSEMBLY (CONT.)

SWIVEL BAR ATTACHMENT WITH EYE AT END OF BOOM

1. Attach the swivel bar to the eye at the end of the boom.

NOTE: The swivel bar has hooks on both ends to accept the hardware used to attach the sling that supports the patient during lift.

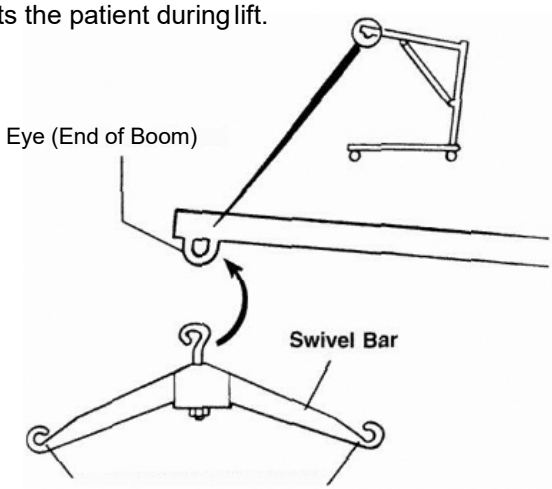

Sling Hardware Attachments

SWIVEL BAR ATTACHMENT WITH EYE AT END OF BOOM

SWIVEL BAR ATTACHMENT WITH MOUNTING BRACKET

1. Push the pin and washers up through the swivel bar pad.
2. Line up hole in pin with mounting bracket holes and secure with shoulder screw and nut provided.

NOTE: The swivel bar has hooks on both ends to accept the hardware used to attach the sling that supports the patient during lift. The swivel bar pad should remain in place during normal use.

NOTE: Make sure Pin and Washers are completely pushed UP through the Swivel Bar Pad.

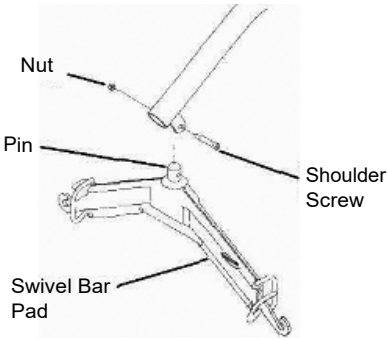

SWIVEL BAR ATTACHMENT WITH MOUNTING BRACKET

ONE - PIECE SLINGS

SLINGS USING CHAINS, O-RINGS AND D-RINGS

Standard Slings

ITEM #	DESCRIPTION
30137	Standard seat/back sling - Canvas 330 lb. weight capacity
30138	Standard seat/back sling w/commode opening - Canvas 330 lb. weight capacity
30132	Standard seat/back sling - Nylon 330 lb. weight capacity
30133	Standard seat/back sling w/commode opening - Nylon 330 lb. weight capacity

Proactive Medical slings are designed specifically for use with Proactive Medical Patient Lifts and made to support the patient during lift and transfer procedures. Slings attach to the lift with either straps or chains (inter-changeable). The slings are reinforced at all points of attachment for safety. The fabrics used in these slings are of very durable materials that resist deterioration from exposure to moisture and laundering. This design will accommodate patients of heavy or light weight with support from the shoulders to the knees. The contour shape provides comfort during the lift by avoiding the bulk of excess material between the back and seat sections.

FABRIC

The fabric has a smooth inner side. The outer side has binding tape around the pocket.

NOTE: Always place the sling under the patient with the smooth side next to the body. Sling fabrics are offered in a choice of three (3) materials. Canvas, Nylon and Polyester.

NOTE: Laundering should always be done with dark colors.
Open mesh nylon fabric is an exceptional material that provides safety and comfort for the patient. The open mesh weave of the fabric preshrunk, and durable for use and laundering. It provides considerable traction to resist slipping and sliding during use.

BODY

Slings may be ordered at the time of purchase with a commode opening in the seat section for use over a commode or a commode chair.

Each sling includes four (4) metal support bars that have a hole at the center to attach the S-hook.
When shipped from the factory, these reinforcing metal support bars are enclosed in the sling pocket with the hole exposed.

ONE - PIECE SLINGS (CONT.)

FULL BODY AND PADDED “U” SLING

Slings attach to the lift with straps for easy positioning. Each loop strap is reinforced at the hook-up point for strength and durability.

FABRIC

The outer side has a reinforced "grab handle" for assistance in positioning the patient in a wheelchair, commode, etc. The edging is soft yet durable with extra reinforced stitching for safety.

NOTE: Always place the sling under the patient with the handle away from the patient.

NOTE: Laundering should always be done with dark colors. Refer to tagged washing instructions on the sling.

The full body and “U” sling fabrics are an exceptional material that provides safety and comfort for the patient. They provide considerable traction to resist slipping and sliding during use.

BODY

Slings may be ordered at the time of purchase with a commode opening in the seat section for use over a commode or a commode chair. Slings are constructed with a high back section and built-in headrest that provides additional support for the head and neck.

POSITIONING THE SLING (WITHOUT HEADREST)

1. Position the patient in the center of the bed and laying flat on his/her back.
2. Fold the sling in half (lengthwise) and place the fabric sections of the sling beside the patient.

NOTE: The sling seams (uneven surface) will be against the bed surface and facing the attendant when folded. The opposite side of the fabric is smooth. After the sling is positioned for lifting purposes, the smooth side will be next to the patient.

POSITIONING THE SLING (WITHOUT HEADREST)

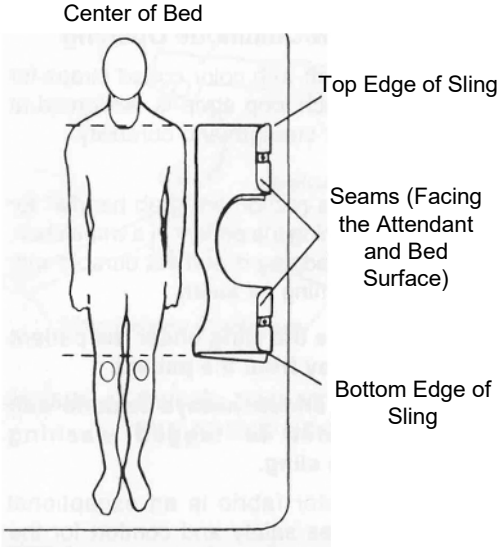

ONE - PIECE SLINGS (CONT.)

3. The top edge of the sling fabric (nearest to the patient's head) should be slightly above the armpit level of the patient.
4. The bottom edge of the sling fabric should then be a few inches above the back of the patient's knee.
5. With both attendants holding the patient, push the folded sling under the patient without rolling him/her over.

POSITIONING THE PATIENT ON THE SLING

NOTE: Use the following method to easily move the patient and avoid strain to yourself.

1. If the patient is to roll to their LEFT-SIDE, then elevate the patient's RIGHT KNEE until the right foot is flat on the bed.

NOTE: Proactive Medical recommends that two (2) attendants (One [1] on each side of the bed) be used when positioning the patient in a sling.

2. With an attendant on each side of the bed and up against the mattress, the attendant on the left-hand side of the bed will position his/her RIGHT-HAND on the elevated KNEE and his/ her LEFT-HAND under the patient's RIGHT SHOULDER, slowly push on the knee and assist with a slight lift of the shoulder and the patient will easily roll onto their side.
3. With the patient on their side, push the fabrics of the seat and back gently under them.

NOTE: The upper edge of the back section should be positioned slightly above the armpit level and the lower edge of the seat section positioned a few inches above the back of the patient's knees.

4. Roll the patient on to his/her back. NOTE: Attendants will reverse roles.
5. After the patient has been positioned once again on his/her back, you now need to roll the patient to their RIGHT-SIDE (facing the attendant on the LEFT).
6. With an attendant on each side of the bed and up against the mattress, the attendant on the right-hand side of the bed will elevate the LEFT KNEE and position his/her LEFT-HAND on the elevated KNEE and his/her RIGHT-HAND under the patient's LEFT SHOULDER. The attendant will slowly push on the knee and assist with a slight lift of the shoulder and the patient will easily roll onto their side.
7. Pull the fabrics of the seat and back across the mattress until they are smooth.
8. Roll the patient onto their back and they should be approximately centered on the sling.
9. You are now ready to attach the chains or straps to the sling.

PATIENT CENTERED IN SLING

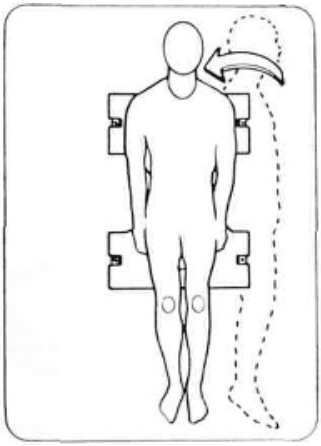

PADDED, “U” SLINGS

NOTE: Proactive Medical recommends that two (2) attendants (One [1] in front and one [1] in back of the wheelchair) be used when positioning the patient in the sling.

NOTE: Use the following method to easily move the patient and avoid strain to yourself.

WARNING: If the patient is in a wheelchair, secure the wheel locks in place to prevent the chair from moving forward or backwards.

1. With the patient sitting in a chair one (1) attendant in the front and the other attendant in the back, lean the patient forward.

NOTE: The front attendant will be supporting the weight of the patient.

2. Place the sling behind the patient and bring the flaps out alongside the patient’s legs.

NOTE: The back of the sling (mounting area) should be parallel to the patient's upper arms and be positioned between the top of the patient's back and the top of the chair back.

3. With the back of the sling positioned properly, push the edges of the commode opening under the patient’s buttocks.
4. Lean the patient back into the chair with the attendant in the rear supporting his/her weight.
5. Lift the patient's legs (one at a time) while holding the leg panel of the sling, reach under the patient's leg and pull until the leg panel of the sling is behind the patient's knees (about three [3] inches) and the back of the sling remains in position.
6. The straps may be crossed BETWEEN or UNDERNEATH the patient's legs.
7. Refer to Attaching the Slings to the Patient Lift in LIFTING THE PATIENT Section of this manual.

ATTACHING THE SLING HARDWARE

The hardware used with the one-piece contour sling includes four (4) metal support bars. The hardware inserts into the pockets at the edge of the fabric. The pocket that will hold the metal bar has an opening in the center. The pocket is sewn closed on one end and has an open-end with a strap on the other.

NOTE: When the slings are laundered, remove the four (4) metal support bars. They MUST be replaced or the sling cannot be used for lifting purposes.

Inserting the Four (4) Metal Support Bars into the Sling

NOTE: When inserting each metal bar into the sling pocket, align the metal support bar in the center of the strap (after it has been pulled down) and push the metal support bar into the sling pocket. The sling is sewn on both sides so the center location is critical.

1. To insert the metal support bar, pull the strap down allowing the bar to pass through the opening in the sling pocket.
2. Push the metal support bar through until the mounting hole clears the center opening of the sling pocket.
3. Once the opposite end of the bar is inside the sewn pocket, push the strap over the metal support bar to prevent it from falling out.

NOTE: The hole in the metal bar should be in the center of the pocket opening. This is where the S-hook of the chain or strap will be attached.

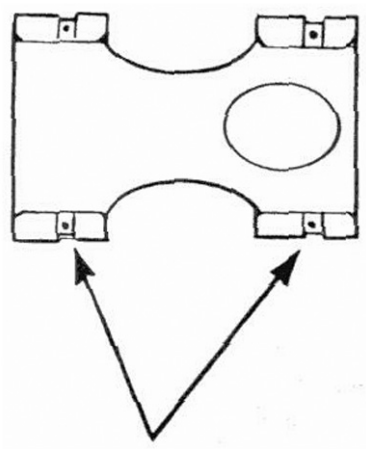

Metal Support Bars with Openings for Chains or Straps

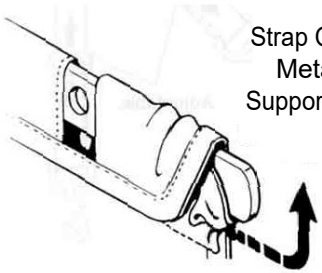

ATTACHING THE SLING HARDWARE (CONT.)

CAUTION- When using either the chains or straps to connect the sling to the patient lift, the shortest of the two (2) sections of the chains or straps MUST be attached to the back section of the sling. Using the long section will leave little or no support for the patient's back.

1. With the patient laying on his/her back and positioned properly in the sling, lay the chains or straps on the bed next to the sling.
2. The short section of chain or strap will be placed parallel to the patients back. This will position the longer section of chain or strap from the waist to the mid-section of the thigh.
3. The S-hooks on the ends of the chains or straps are inserted into the metal support bar of the sling.
4. The S-hook MUST be inserted through the hole in the support bar with the open end facing away from the patient.
5. The O-ring of the chain assembly is the suggested location to attach to the swivel bar, however, by changing to different links, you can reposition the patient into a reclining or more upright position.

WARNING - When changing to different lengths, DO NOT disconnect the O-rings of the chains from the swivel bar. Position BOTH the O-rings and additional chain link onto the hooks of the swivel bar.

6. The straps can be simply adjusted to achieve the same effect.
7. With the sling positioned under the patient, and the metal support bars in place, you are now ready to move the lift into position to attach the sling hardware to the swivel bar.

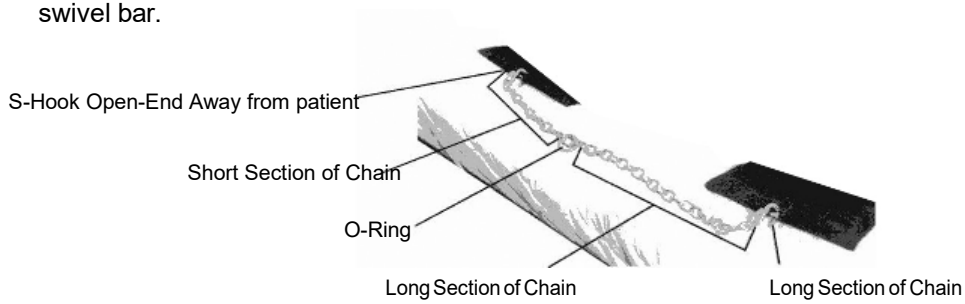

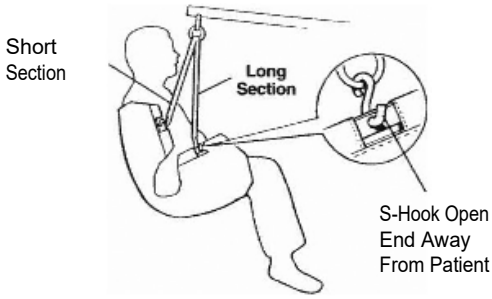

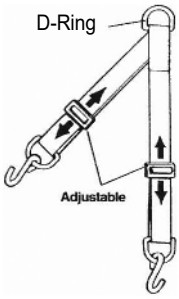

ATTACHING THE FULL BODY AND PADDED "U" SLING

NOTE: Refer to PATIENT LIFT SAFETY SUMMARY in the front of this manual before proceeding further and observe all WARNINGS indicated.

WARNING - Before lifting or transferring the patient, the base legs MUST be LOCKED in the OPEN position for optimum stability and safety.

NOTE: Before positioning the legs of the patient lift under the bed, make sure that the area is clear of any obstructions.

1. With the legs of the base OPEN and LOCKED, use the steering handle to push the patient lift underneath the bed.
2. Lower the patient lift for easy attachment of the sling.
3. Place the straps of the sling over the hooks of the swivel bar.

CAUTION - When connecting the sling to the patient lift, the shortest of the straps MUST be at the back of the patient for support. Using the long section will leave little or no support for the patient's back.

OPERATION

OPERATING THE PATIENT LIFT

To Open the Legs of the Adjustable Base

WARNING! - The operation of the patient lift is an easy and safe procedure. DO NOT attempt any transfer without approval of the patient's physician, nurse or medical attendant. Thoroughly read the instructions in this Owner's Manual, observe a trained team of experts performing the lifting procedures and then perform the entire lift procedure several times with proper supervision and a capable individual acting as a patient.

ONLY operate this lift with the legs in maximum open position and locked in place. The base legs MUST be locked in the open position at all times for stability and patient safety when lifting and transferring a patient.
The Shifter handle is used to open the legs of the base for stability when lifting a patient.

1. Grasp the shifter handle in one hand and place the opposite hand on the steering handle of the mast for balance.
2. Push the shifter handle to your RIGHT to release the lock pin from its mounting hole.
3. Turn the handle CLOCKWISE until you are able to secure the lock pin into the opposite mounting hole to fully open the legs of the base.

NOTE: The lock pin MUST insert into its mounting hole in the socket assembly to lock the legs in the full open position. The shifter handle will be in the vertical position; parallel with the mast assembly.

WARNING- If the shifter handle is NOT vertical, the lock pin is NOT seated in the socket assembly. DO NOT use the patient lift until lock pin is properly seated and LOCKED in place or injury and/or damage may occur.

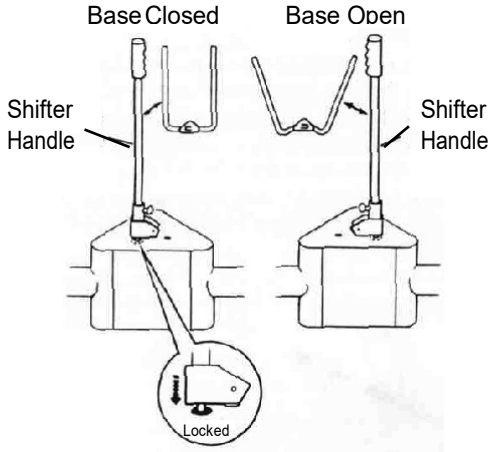

TO OPEN THE LEGS OF THE ADJUSTABLE BASE

OPERATION (CONT.)

There are two (2) controls on the pump assembly:

1. The control valve
2. The pump handle

RAISING THE LIFT. The control valve MUST be in the CLOSED position (control valve positioned towards pump handle) to move the pump handle up and down to elevate the boom and the patient.

LOWERING THE LIFT. The control handle MUST be in the OPEN position (control valve positioned away from pump handle) to lower the boom and the patient. The rate of descent can be controlled by varying the amount that the control valve is opened.

NOTE: A safety gate is part of the hydraulic system that maintains a SLOW constant descent of the boom regardless of how far the control valve is

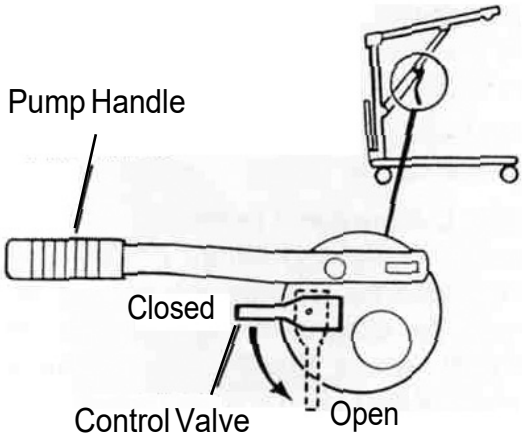

RAISING/LOWERING THE HYDRAULIC PATIENT LIFT

LIFTING THE PATIENT

NOTE: Refer to PATIENT LIFT SAFETY SUMMARY in the front of this manual before proceeding further and observe all WARNINGS indicated.

WARNING- Before lifting or transferring the patient, the base legs MUST be locked in the open position for optimum stability and safety.

1. Using the steering handle, push the patient lift underneath the bed.
2. Lower the patient lift for easy attachment of the sling hardware or straps.
3. Chains, 0-Rings and D-Rings:
   After the chains, O-Rings or D-Rings are attached and the S-hooks are secured in both sides of the sling sections (open end facing outward), place the D-rings of the strap assembly or the O-ring and chain link of the chain assembly over the chain hooks of the swivel bar.
4. Chain-Free Full Body and Padded "U" Slings:
   Attach the straps to the strap hooks of the swivel bar.

WARNING- ONLY attach STRAPS of the Full Body and Padded "U" Slings to the STRAP HOOKS of the Swivel Bar. ONLY attach CHAINS, 0-RINGS or D-RINGS to CHAIN HOOKS of the Swivel Bar. DO NOT change or intermix attachment points or serious injury may occur.

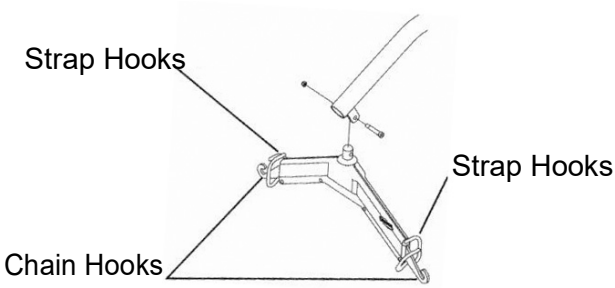

ATTACHING THE SLING TO THE SWIVEL BAR

5. Pump the lift handle or turn the handle clockwise (clicking sound is normal) to raise the patient above the bed. The patient should be elevated high enough to clear the bed and their weight supported by the lift.

NOTE: The manual (crank) lift handle will automatically turn back one (1) quarter turn to lock in place.

NOTE: On a hydraulic lift, the boom will stay in position until the control valve is opened.

LIFTING THE PATIENT (CONT.)

6. When the patient is lifted from the bed (with the patient's head supported), he/she will be raised to a sitting position.

NOTE: A headrest sling may be used for support for the patient's head during elevation and transfer.

WARNING- When elevated a few inches off the surface of the bed and before moving the patient, check again to make sure that all hardware is properly connected. Check each S-hook to make sure it is completely attached to the metal support bars of the sling. Check the attachment of the straps, O or D-rings to the swivel bar hooks. If any attachments are NOT properly in place, lower the patient back onto the bed and correct this problem.

Adjustments for safety and comfort should be made before moving the patient. Patient's arms should be inside of the chains or straps.

7. When patient is clear of the bed surface, swing their feet off the bed.
8. Using the steering handles, move the patient lift away from the bed.
9. When moving the patient lift away from the bed, turn patient so that he/she faces attendant operating the patient lift.
10. Open control valve lowering patient so that his feet rest on or over the base of the lift, straddling the mast. Close control valve.

NOTE: The lower center of gravity provides stability making the patient feel more secure and the lift easier to pull or push.

11. Pull the patient lift away from the bed and push from behind with both hands.

NOTE: DO NOT use the rear locking casters when patient is in the lift.

TRANSPORTING PATIENT FOR USE OF BATHROOM FACILITIES

TRANSPORTING PATIENT FOR USE OF COMMODE CHAIR OR STANDARD COMMODE

TRANSFERRING TO A COMMODE CHAIR

The slings with commode openings are designed to be used with either a commode chair or standard commode.

NOTE: Proactive Medical recommends that the sling remain connected to the swivel bar during the patient's use of either the commode chair or standard commode.

WARNING- When elevated a few inches off the surface of the commode chair or standard commode and before moving the patient, check again to make sure that all hardware or straps are properly connected. Check each S-hook to make sure it is completely attached to the metal bars of the sling. Check the attachment of the straps, O or D-rings to the swivel bar hooks. If any attachments are NOT properly in place, lower the patient back onto the commode chair or standard commode to correct this problem.

Adjustments for safety and comfort should be made before moving the patient. Patient's arms should be inside of the chains or straps.

Proactive Medical does NOT recommend locking of the rear casters of the patient lift when lifting an individual. Doing so could cause the lift to tip and endanger the patient and assistants. Proactive Medical DOES recommend that the rear casters be left UNLOCKED during lifting procedures to allow the patient lift to stabilize itself when the patient is initially lifted from a chair, bed or any stationary object.

1. The patient should be elevated high enough to clear the commode chair and their weight supported by the lift.
2. With the help of both attendants, guide the patient onto the commode chair.
3. Lower the patient onto the commode chair leaving the sling attached to the swivel bar.
4. When complete, recheck for correct attachment and then raise the patient off of the commode chair.
5. When patient is clear of the commode surface (using the steering handles), move the lift away from the commode chair.
6. To return patient to bed, reverse procedures concerning lifting the patient, operation and sling attachment.
7. To return or place patient in a wheelchair, refer to TRANSFERRING TO A WHEELCHAIR in this manual.

TRANSPORTING PATIENT FOR USE OF BATHROOM FACILITIES

TRANSFERRING TO A STANDARD COMMODE

NOTE: The patient MUST be transferred to a WHEELCHAIR and transported to the bathroom facilities before using the patient lift again to position the patient on a standard commode. Refer to TRANSFERRING TO A WHEELCHAIR in this manual. After this has been accomplished refer to the following:

1. To lift the patient from the bed, follow the procedures concerning lifting the patient, operation and sling attachment.
2. The patient should be elevated high enough to clear the standard commode and their weight supported by the patient lift.
3. With the help of both assistants, guide the patient onto the standard commode.
4. Lower the patient onto the standard commode leaving the sling attached to the swivel bar hooks.
5. When complete, recheck for correct attachment and then raise the patient off of the standard commode.
6. When patient is clear of the standard commode surface (using the steering handles), move the lift away from the standard commode.
7. To return or place a patient in a wheelchair, refer to TRANSFERRING TO A WHEELCHAIR in this manual.
8. To return patient to bed, reverse procedures concerning lifting the patient, operation and sling attachment.

WARNING- When elevated a few inches off the surface of the bed and before moving the patient, check again to make sure that all hardware or straps are properly connected. Check each S-hook to make sure it is completely attached to the metal support bars of the sling. Check the attachment of the straps, O or D-rings to the swivel bar hooks. If any attachments are NOT properly in place, lower the patient completely to correct this problem.

Adjustments for safety and comfort should be made before moving the patient. Patient's arms should be inside of the chains or straps

1. To remove the patient from the bed, observe procedures concerning sling attachment, operation and lifting the patient.
2. The patient should be elevated high enough to clear the bed and be able to slide the portable bathtub under the patient.
3. Lower the patient into the portable bathtub.
4. Detach chains/straps from sling and reattach to the portable bathtub.
5. Using the lift, raise the sides of the portable bathtub.
6. Bathe patient.
7. Reverse procedures to return patient to bed.

TRANSFERRING TO A WHEELCHAIR

NOTE: Proactive Medical recommends that two (2) attendants be used when transferring a patient to a wheelchair.

WARNING- When elevated a few inches off the seating surface of the wheelchair and before moving the patient, check again to make sure that all hardware and straps are properly connected. Check each S-hook to make sure it is completely attached to the metal support bars of the sling. Check the attachment of the straps, 0 or D- rings to the swivel bar hooks. If any attachments are NOT properly in place, lower the patient completely to correct this problem.

Adjustments for safety and comfort should be made before moving the patient. Patient's arms should be inside of the chains or straps.

Proactive Medical does NOT recommend locking of the rear casters of the patient lift when lifting an individual. Doing so could cause the lift to tip and endanger the patient and assistants.

Proactive Medical DOES recommend that the rear casters be left UNLOCKED during lifting procedures to allow the patient lift to stabilize itself when the patient is initially lifted from a chair, bed or any stationary object.

1. The legs of the lift (w/patient) are in the opened position.
2. The wheelchair is moved into position.

WARNING- Wheelchair wheel locks MUST be in a locked position before lowering the patient into the wheelchair for transport

3. The rear wheel locks are locked to further prevent movement of the chair.
4. The patient is positioned over the seat with their back against the back of the chair.
5. Begin to lower the patient either by opening the control valve or by turning the crank counterclockwise.
6. With one (1) attendant behind the chair and the other operating the patient lift, the attendant behind the chair will pull back on the handle or sides of the sling to place the patient into the back of the chair. This will maintain a good center of balance and prevent the chair from tipping forward.
7. The sling is disconnected from the patient lift.
8. To return to the bed, reverse procedures concerning lifting the patient, operation and sling attachments.

TRANSFERRING FROM A WHEELCHAIR TO A CAR

NOTE: To position an individual in a sling, follow the procedures concerning lifting the patient, operation and sling attachments.

NOTE: Proactive Medical recommends that two (2) attendants be used when transferring a patient from a wheelchair to a car.

WARNING- When elevated a few inches off the seating surface of the wheelchair and before moving the patient, check again to make sure that all hardware or straps are properly connected. Check each S-hook to make sure it is completely attached to the metal support bars of the sling. Check the attachment of the straps, 0 or D-rings to the swivel bar hooks. If any attachments are NOT properly in place, lower the patient completely to correct this problem.

Adjustments for safety and comfort should be made before moving the patient. Patient's arms should be inside of the chains or straps.

Proactive Medical does NOT recommend locking of the rear casters of the patient lift when lifting an individual. Doing so could cause the lift to tip and endanger the patient and assistants.

Proactive Medical DOES recommend that the rear casters be left UNLOCKED during lifting procedures to allow the patient lift to stabilize itself when the patient is initially lifted from a chair, bed or any stationary object.

NOTE: The transfer to a car should be made on a level driveway or surface.

NOTE: Before lifting the patient from the chair, make sure to shorten the distance between the patient and the boom. This will make the transfer into the seat of the car easier.

NOTE: Attendants should practice "Good Body Mechanics" when positioning patient onto any seating surface.

1. Attach the chains or straps to swivel bar.
2. Engage the rear wheel locks of the wheelchair.
3. Lift the patient from the wheelchair.
4. The lift is moved, by the steering handles, to a position close to the doorway of the car.
5. Lower the boom of the lift until it is about even with the roof of the car.
6. As one (1) attendant pushes the patient into the car by his knees until he/she is positioned over the seat of the car, the other attendant lowers the boom. As the boom is being lowered, the first assistant is not only pushing but turning the patient so he/she is positioned facing the front of the car.
7. The patient will come to rest on the seat of the car.

TRANSFERRING FROM A WHEELCHAIR TO A CAR (CONT.)

8. While one (1) attendant is holding the patient, the other attendant removes the chains or straps from the swivel bar and slides the patient lift out of the way.
9. The sling may be left under the patient or removed.
10. The mast, boom and pump assembly may be removed from the base and transported in the car.

NOTE: If the lift and wheelchair are both packed in the trunk of the car, care should be taken not to damage the spokes of the wheelchair on the steering handles of the lift.

TRANSFERRING FROM A CAR TO A WHEELCHAIR

NOTE: Proactive Medical recommends that two (2) attendants be used when transferring a patient from a wheelchair to a car.

WARNING- When elevated a few inches off the seat of the car and before moving the patient, check again to make sure that all hardware or straps are properly connected. Check each S-hook to make sure it is completely attached to the metal support bars of the sling. Check the attachment of the straps, O or D-rings to the swivel bar hooks. If any attachments are NOT properly in place, lower the patient completely to correct this problem.

Adjustments for safety and comfort should be made before moving the patient. Patient's arms should be inside of the chains or straps.

Proactive Medical does NOT recommend locking of the rear casters of the patient lift when lifting an individual. Doing so could cause the lift to tip and endanger the patient and assistants.

Proactive Medical DOES recommend that the rear casters be left UNLOCKED during lifting procedures to allow the patient lift to stabilize itself when the patient is initially lifted from a chair, bed or any stationary object.

NOTE: One (1) assistant will support patient at all times.

1. With the first assistant supporting the patient, the second assistant then lowers the boom of the patient lift until the hooks of the swivel bar are even with the roof of the car.
2. Attach the sling to the swivel bar.
3. Lift the patient up off of seat until straps are taut.
4. Turn patient with sling until legs are outside of car.

NOTE: Attendants should practice "Good Body Mechanics" when positioning patient onto any seating surface.

5. Lift up on legs with one (1) hand and tilt the patient back with the other hand.
6. The second assistant should pull the patient lift away from the car until the patient is completely clear of the door frame.
7. Release the patient back to his/her normal sitting position in the sling.
8. Position the wheelchair under the patient.
9. Engage the rear wheel locks of the wheelchair.

WARNING- Wheelchair wheel locks MUST be in a locked position before lowering the patient into the wheelchair for transport.

10. One (1) assistant will slowly lower the patient into the wheelchair while the other assistant guides him/her into the chair.

CARE AND MAINTENANCE OF YOUR PATIENT LIFT

NOTE: Follow the maintenance procedures described in this manual to keep your patient lift in continuous service.

The Proactive Medical Patient Lift is designed to provide a maximum of safe, efficient and satisfactory service with minimum care and maintenance.

All parts of the Proactive Medical Lift are made of the best grades of steel, but metal to metal contact will wear after considerable use.

There is no adjustment or maintenance of either the casters or brakes, other than cleaning, lubrication and checking axle and swivel bolts for tightness. Remove all debris, etc. from the wheel and swivel bearings. If any parts are worn, replace these parts immediately.

If you question the safety of any part of the lift, contact your Dealer immediately and advise him/ her of your problem.

HYDRAULIC PUMP

All parts of the Hydraulic Pump are precision machined, then carefully assembled and tested to ensure reliable service. The pump assembly is completely enclosed and sealed with Neoprene rings to prevent leakage of hydraulic oil. A small amount of oil (about a drop) will accumulate around the piston from time to time and should be removed with a facial tissue.

WARNING- The hydraulic pump is sealed at the factory and if service is required, the pump unit MUST be returned to the factory for repair. DO NOT attempt to OPEN the hydraulic pump or obtain local service. This will void the warranty and might result in damage and costly repair. Consult your dealer for information.

LUBRICATION- The Proactive Medical lift is designed for minimum maintenance; however, a six (6) month check and lubrication should ensure continued safety and reliability.

Keep lift and slings clean and in good working order. Any defect should be noted and reported to your dealer as soon as possible.

The casters MUST swivel and roll smoothly. A light grease (waterproof auto lubricant) may be applied to the ball bearing swivel of the casters once a year. Apply more frequently if the casters are exposed to extreme moist conditions.

The connection between the mast and the base should be cleaned and coated with petroleum jelly prior to assembly.

CARE AND MAINTENANCE OF YOUR PATIENT LIFT

Lubricate all pivot points. Wipe all excess lubricant from lift surface.

1. Swivel Bar at Mounting Bracket
2. Boom Mounting Bracket
3. Boom to Mast Mount
4. Mast Mounting Bracket
5. Base to Mast Mount
6. Rear Casters
7. Front Casters

WEAR AND DAMAGE

It is important to inspect all stressed parts, such as slings, spreader bar and any pivot for slings for signs of cracking, fraying, deformation or deterioration. Replace any defective parts immediately and ensure that the lift is not used until repairs are made. All sling metal parts should be inspected every three (3) months, and if wear is apparent, replacement must be made.

CLEANING

The sling should be washed regularly in water temperature of 14OF (60°C) and a biological solution. A soft cloth, dampened with water and a small amount of mild detergent, is all that is needed to clean the patient lift. The lift can be cleaned with nonabrasive cleaners. Auto wax or furniture polish will help maintain the sparkling finish over a long period of time.

MAINTENANCE SAFETY INSPECTION CHECKLIST

ITEM	INITIALLY	INSPECT ADJUST MONTHLY	INSPECT ADJUST PERIODICALLY
THE CASTER BASE			
Inspect for missing hardware.	X	X	
Lift Base opens/closes with ease.	X		X
Inspect roll pin to ensure secure base.	X	X	
Inspect casters and axle bolts for tightness.	X	X	
Inspect casters for smooth swivel and roll.	X	X	
Apply a light grease to caster ball bearings.			X
SHIFTER HANDLE			
Operates smoothly.	X		X
Locks adjustable base whenever engaged.	X	X	
Check roll pin for wear.	X	X	
THE MAST			
Mast should lock securely when assembled.	X	X	
Inspect for bends or defections.	X	X	
THE BOOM			
Check all hardware and swivel bar supports.	X	X	
Inspect for bends or defections.	X	X	
Inspect bolted joints of boom for wear.	X	X	
Inspect to ensure that the boom is centered between the base legs.	X	X	X
THE SWIVEL BAR			
Check the hooks for wear or damaged.	X	X	X
Check sling hooks for wear or deflection.	X	X	X
THE PUMP ASSEMBLY			
Check for leakage.	X	X	X
Inspect hardware on mast and boom.	X	X	X
Check for wear or deflection of rod (IF DAMAGED, RETURN TO FACTORY.)	X	X	X
THE PUMP HANDLE			
Check for smooth operation.	X		X

MAINTENANCE SAFETY INSPECTION CHECKLIST

ITEM	INITIALLY	INSPECT ADJUST MONTHLY	INSPECT ADJUST PERIODICALLY
THE CONTROL VALVE Easy to maneuver and closes easily.	X		X
CLEANING Whenever necessary.			X
SLINGS AND HARDWARE CHECK ALL SLING HARDWARE Chains, S-hooks, O-Rings and D-Rings each time it is used to ensure proper connection and patient safety.	X	X	
Inspect sling attachments and material for wear.	X	X	
Inspect nylon web straps for wear.	X	X	

LIMITED WARRANTY

Your Proactive Medical brand product is warranted as follows:
Limited lifetime warranty on the frame
1 year limited warranty on the pump and lift components.

This device was built to exacting standards and carefully inspected prior to shipment. This Lifetime Limited Warranty is an expression of our confidence in the materials and workmanship of our products and our assurance to the consumer of years of dependable service.

This warranty does not cover device failure due to owner misuse or negligence, or normal wear and tear. The warranty does not extend to non-durable components, such as rubber accessories, casters, and grips, which are subject to normal wear and need periodic replacement.

If you have a question about your Proactive Medical device or this warranty, please contact an authorized Proactive Medical dealer.

Proactive
medical products