Manual Wheelchair Guide

A comprehensive introduction to optimizing manual mobility for client function

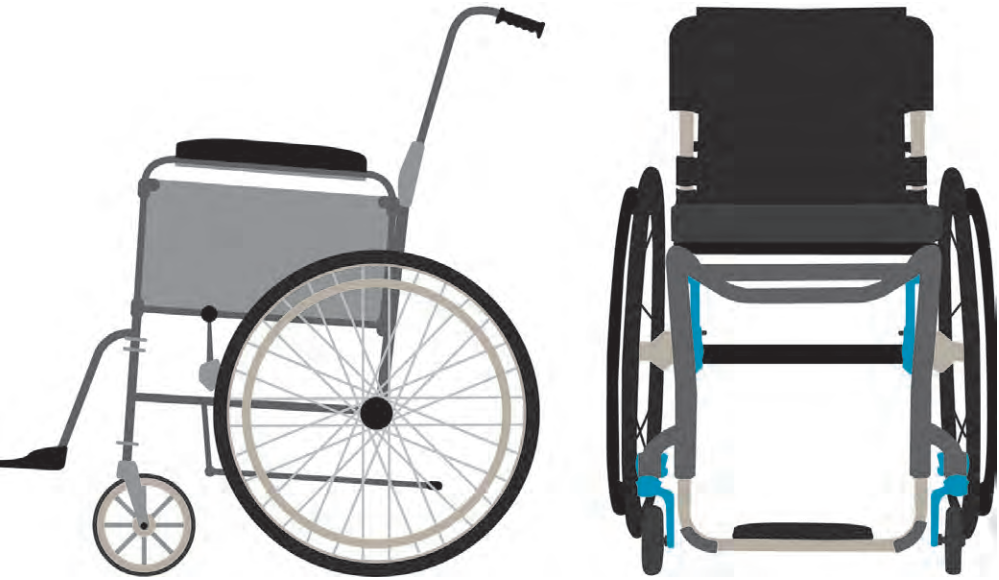

permobil

Purpose of this Guide

One of the greatest barriers to the provision of seating and wheeled mobility is first identifying the need and then documenting and justifying that need for equipment. This guide is meant to be a helpful resource to healthcare professionals to:

- Identify the need for manual mobility
- Translate the need for a mobility device to the most appropriate wheelchair model and options
- Understand how to effectively document and justify the equipment chosen and meet the necessary requirements
- Understand what the components of an ultra lightweight manual wheelchair are and how to appropriately measure for optimal configuration

Look for these info boxes throughout the guide. They include quick tips or takeaways for that section.

This guide was created using process and funding guidelines for the United States including Medicare coding terminology. Therefore, some terms such as K0005 and Ultra Lightweight Manual Wheelchair, are considered to be interchangeable throughout.

This guide is meant to be a comprehensive introduction to manual mobility.

Note This guide is not intended to replace the advice of a medical professional.

Table of Contents

Manual Wheelchair Universal Terms

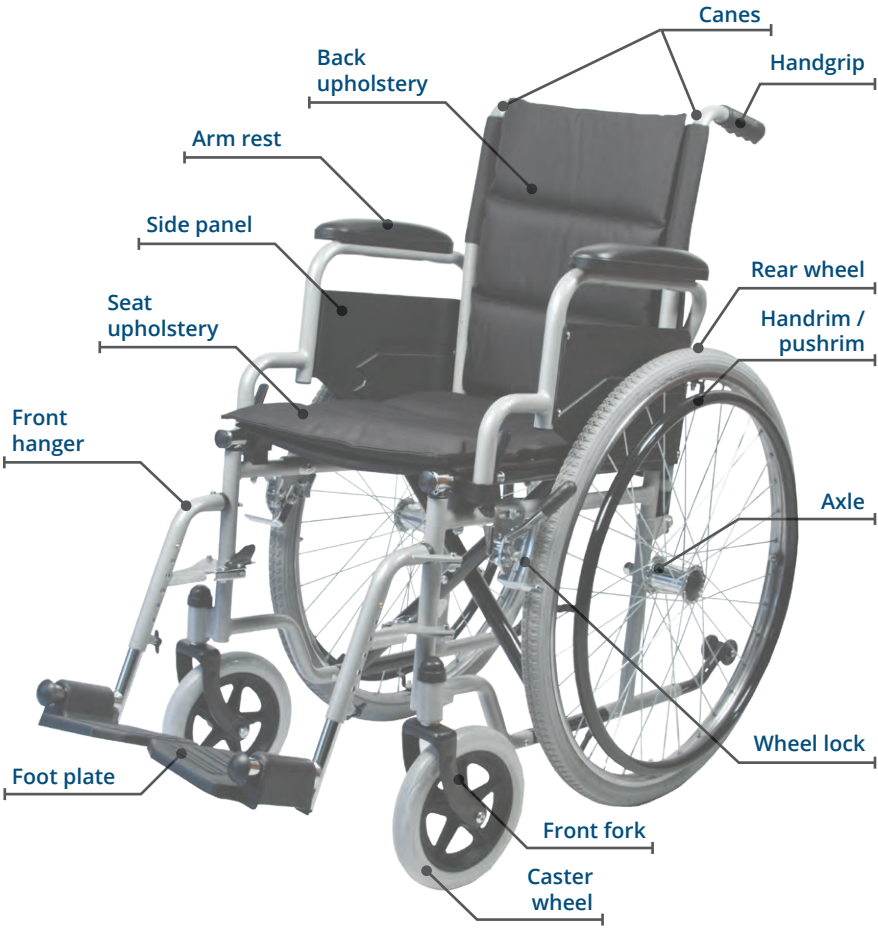

Common Challenges

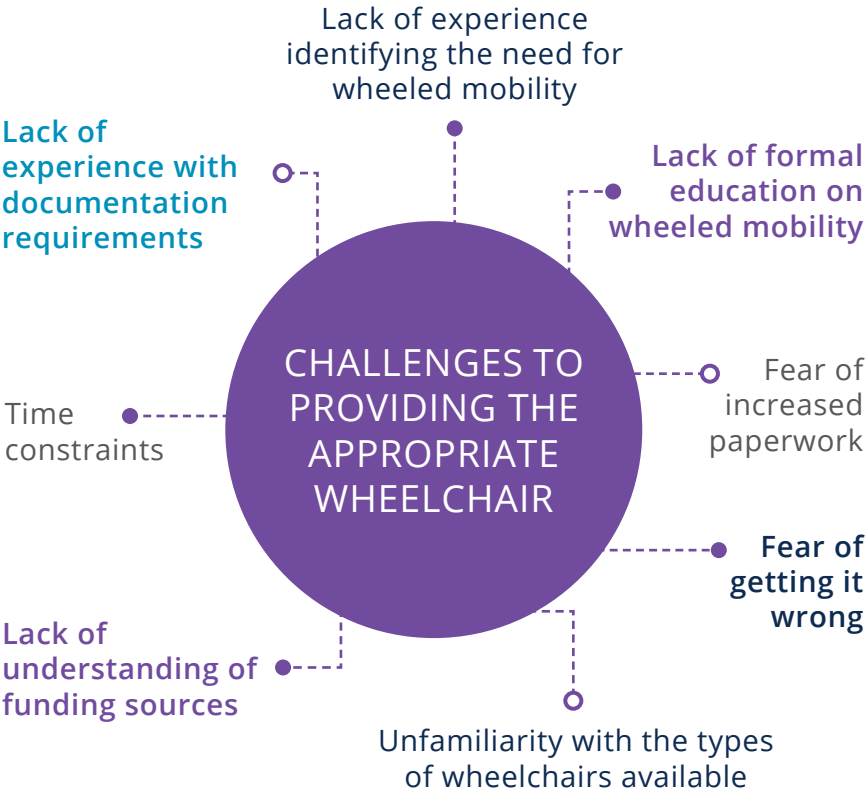

✱ *Despite wanting what is best for our clients, the above factors may prevent us from doing it.*

Identifying the Need

HOW DO I KNOW IF MY PATIENT NEEDS A WHEELCHAIR?

Consider your patient's quality of life. Document any of the indicators below to justify the need.

1. Patient is **non-ambulatory**
2. **Demonstrates decreased safety** with ambulation or is **at risk for falls** within the home. Ask about history of falls; perform an objective balance assessment, e.g. BERG Balance Scale (BBS), Dynamic Gait Index (DGI), Timed Up and Go (TUG)
3. Requires **assistance for ambulation** within the home and wheeled mobility would allow independence
4. Requires **increased time for ambulation** within the home. Perform a gait speed test; think about performing ADLs in a reasonable amount of time
5. **Unable to consistently ambulate throughout the day** in the home, which affects their ADLs. Look at a 24-hour period
6. Their current wheelchair is in **disrepair or not meeting their needs** for mobility or postural support.

* ***Here are scenarios where wheeled mobility could significantly increase a person's quality of life:***

- **They can ambulate but are at high risk of falls**
- **They have frequent urge incontinence because they are unable to get to the restroom on time**
- **Their O_2 saturations drop below or heart rate increases above a safe range with ambulation**
- **Their day consists of sitting in a recliner and transferring to a bedside commode as needed**
- **Nature of their diagnosis, over-fatigue is contra-indicated, and a WC is required in order to avoid exacerbation of symptoms.**

Qualifying for a Manual Wheelchair

NOW THAT I KNOW MY CLIENT WILL BENEFIT FROM A WHEELCHAIR, WHAT DO I DO?

Wheelchair selection is not diagnosis specific and requires evidence of medical necessity. Step one is a physician's visit with notes that state:

- Mobility related diagnosis - *e.g. hemiplegia due to stroke*
- Symptoms that affect mobility
- Mobility Related ADLs (MRADLs) affected by the mobility limitation
- Current ambulation limitations. Why they cannot ambulate at a safe, functional level

Then, a referral is made to PT/OT and the fun begins! It becomes our task to evaluate the client and determine what level of wheeled mobility they need to lead safe, functional lives.

The documentation must match from MD to PT/OT! If the MD says they can ambulate or if a diagnosis code does not match, it will be a problem.

Manual Wheelchair Justification

HOW DO I JUSTIFY MY CLIENT'S NEED FOR A WHEELCHAIR?

Prior to choosing the type of wheelchair, the PT/OT needs to justify the need for a manual wheelchair.

Ask yourself the following questions, and the answers will begin to guide you towards the right wheelchair:

1. Does your client have a mobility limitation that significantly impairs his/her ability to participate in **one or more MRADLs** in the home?

   *Does it **prevent** them from doing MRADLs?*

   *Are they **unsafe** to perform MRADLs?*

   *Can they perform MRADLs in a **reasonable time frame**?*

2. Can the mobility limitation be resolved by a cane or walker?
3. Do they have the desire or capability to propel a wheelchair?

   If they can't propel, do they have a willing caregiver?

4. Does the client's home have the space/layout for functional wheelchair use?

   Measure doorways and ask your ATP for required measurements to get through doorways based on the wheelchair model selected

   Measure the time it takes to propel the WC to the bathroom from someplace else in the home

✱ ***Always document how the right equipment allows them to perform routine tasks more independently.***

WHAT IF YOUR CLIENT ALREADY USES A WHEELCHAIR?

Keep in mind the 5-year lifetime rule. Many insurers will not pay for new equipment unless the current equipment is more than 5 years old or there has been a significant change in medical condition.

If your client uses a wheelchair already, ask the following:

1. How is their posture in their wheelchair?
2. Do they have pain when using their wheelchair?
3. Can they effectively propel their wheelchair?
4. Are they independent in their ADLs?
5. How old is their wheelchair?
6. Was it originally ordered for them, or did they get it from someone else?
7. Consider this: most of us are unaware that a K0004 or lower wheelchair can be a rental. Investigate to find out, is their wheelchair being rented? If so, has it been rented for less than a year? If it has been rented for less than a year, keep in mind that it could be replaced with a different one. *More information on page 24.*

✱ ***Just because a person already has a wheelchair, it doesn't mean it's the most appropriate one for them!***

Understanding DME & CRT Equipment

MY CLIENT HAS THE NEED, BUT HOW DO I GO ABOUT RECOMMENDING THE RIGHT EQUIPMENT FOR THEM?

Let's start with the basics. When it comes to seating and wheeled mobility, products are divided into two groups:

Durable Medical Equipment (DME) *and* Complex Rehabilitation Technology (CRT).

Clients will qualify for certain equipment based on the severity or complexity of their condition. Coverage criteria for CRT MWCs is based on function. Lesser products must have been tried and ruled out in documentation.

"CRT products include medically necessary and individually configured manual and power wheelchairs, seating and positioning systems, and other adaptive equipment such as standing devices and gait trainers. This specialized equipment requires evaluation, configuration, fitting, adjustment, or programming to meet the individual's medical needs and maximize function and independence.

CRT products must be provided by individuals who are certified, registered or otherwise credentialed by recognized organizations in the field of CRT and who are employed by a business specifically accredited by a CMS deemed accreditation organization to provide CRT."

"National Coalition for Assistive and Rehab Technology." NCART, 2019, www.ncart.us/.

DME

DME equipment must meet the following criteria:

- Used for a medical purpose
- Used in the home
- Able to withstand repeated use
- Not usually useful to someone who is not sick, injured, or disabled

WHO MIGHT BE AN APPROPRIATE USER FOR DME MOBILITY EQUIPMENT?

The list below can help you identify if your client's mobility needs might be met by a DME wheelchair:

- Short-term mobility needs *(e.g. temporary limitations post-surgery, fracture, or other medical condition)*
- Sits in the wheelchair for short periods of time *(e.g. for transport pushed by someone else)*
- Propels only short distances
- Has limited/no need for positioning support or adjustment beyond that provided by an appropriate seat cushion or back support
- Does not have a postural deformity and is at minimal to no risk for developing one
- Sits in "standard" dimensions without compromise
- Has normal tone or minimal tonal abnormalities
- Has good sitting balance
- Does not have pain with sitting
- Has a non-progressive condition

Medicare requirements for DME equipment:

- Physician order and recent exam documenting need for mobility device
- No PT/OT evaluation or ATP involvement is required
- Specific justification of the product may come from physician or therapist
- On-site home evaluation is not required *(but you should always conduct one if you are involved)*

DOES THAT MEAN THAT TYPICALLY CLIENTS WITHOUT A SERIOUS INJURY OR CONDITION SHOULD ONLY NEED DME EQUIPMENT?

Definitely not. Go back over the list of qualities that a DME wheelchair user should have. With your client in mind, if you answer "no" or "not really" to ANY of those traits, they may benefit from more advanced equipment.

The populations below (but not limited to) have traditionally been provided with standard DME equipment. This does not mean that it is actually appropriate for them.

- Elderly clients
- Bariatric individuals
- Someone with a low activity level
- Clients dependent in mobility

Always consider best clinical practice when dealing with **ANY** population and fight to provide what is most clinically appropriate. Many of these and other individuals might actually benefit from:

- A lighter weight and optimally configured wheelchair to increase and/or allow their ability to propel and independently perform ADLs
- Adjustability in their seating system to help maintain posture, prevent deformities, and decrease pain
- Individualized sizing to increase function, mobility, skin protection, and sitting tolerance

An appropriate wheelchair that is configured, adjusted, and uniquely fit to them can increase independence, activity level, and quality of life for more than just the individual who is already active and independent.

✱ ***Remember the 5-year rule and consider their prognosis to ensure you are meeting their needs over time.***

The Process of Getting a DME Manual Wheelchair

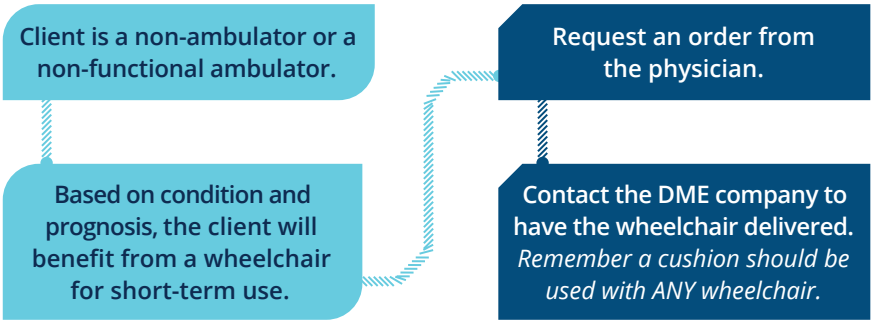

WHAT IF MY CLIENT ALREADY HAS A STANDARD DME MANUAL WHEELCHAIR?

You are not limited to the type of wheelchair that your client has used in the past if they could benefit from better equipment.

People, circumstances, legislation, and technology all change over time. If your client already has a wheelchair, it does not automatically mean that it is the most appropriate choice for them now or that it necessarily ever was.

You also have the option to provide ANY type of seating and positioning equipment, even CRT products, for a DME wheelchair if it benefits your client.

It is up to you to advocate for your clients. Perform your evaluations to help justify the proper equipment choices to address your clients' needs now and over time as best you can.

* *Just because a model of wheelchair was used historically by your client, it doesn't mean their new equipment should be limited to the same technology.*

CRT

CRT products are significantly different from standard DME. The description below will help define the difference in products that qualify as CRT:

- Medically necessary, **individually-configured** manual and power wheelchairs, adaptive seating systems, alternative positioning systems, and other mobility devices
- **Require evaluation, fitting, configuration, adjustment,** or programming
- Designed to **meet specific and unique medical, physical, and functional needs** of individuals to optimize independence and function.

A primary diagnosis resulting from a congenital disorder, progressive or degenerative neuromuscular disease, or from certain types of injury or trauma may be a place to start thinking CRT, but do not limit yourself to those diagnoses.

WHO MIGHT BE AN APPROPRIATE USER FOR CRT MOBILITY EQUIPMENT?

A seating evaluation will define if there is need for CRT equipment, but the list below can help you identify the type of user appropriate for CRT equipment.

- Uses a wheelchair as primary mobility every day
- Sits in the wheelchair for long periods of time
- Has limitations in sitting balance
- Needs specific dimensions to maintain posture and optimize function
- At risk for/has current postural deformities
- Has pain in sitting
- Needs specific support, configuration, and/or adjustments to maintain posture, protect skin, and maximize function
- Propels on varied surfaces/terrain indoors and outdoors
- Has tonal abnormalities that interfere with positioning/mobility
- Has a progressive condition

Requirements for the provision of CRT equipment:

- MD* has a face-to-face exam and documents the need for a mobility device
- MD* writes order for MWC, PMD, and/or wheelchair seating
- MD* writes referral for wheelchair evaluation or signs PT/OT POC
- OT/PT performs clinical evaluation
- ATP performs technology assessment and equipment trials with PT/OT
- PT/OT writes clinical documentation
- Physician* signs PT/OT documentation
- Supplier/ATP submits paperwork to insurance
- ATP and/or PT/OT deliver, fit, and provide training for equipment

**Could also be a NP, PA, or CNS*

Providing CRT equipment:

- ***Requires more knowledgeable, skilled, and experienced professionals***
- ***Requires specialized evaluations, measurements, trials, fittings, training, education, and ongoing modifications***
- ***CRT companies must comply with more rigorous quality standards under Medicare***

Knowing whether your client will be a short-term/part-time or long-term/full-time wheelchair user, will help you identify whether they will require DME or CRT equipment.

A CRT wheelchair is going to be best practice for a full-time wheelchair user <u>every</u> <u>time</u>!

The Process of Getting a CRT Manual Wheelchair

WHERE DO WE START?

Let's look at the big picture of how to get CRT equipment:

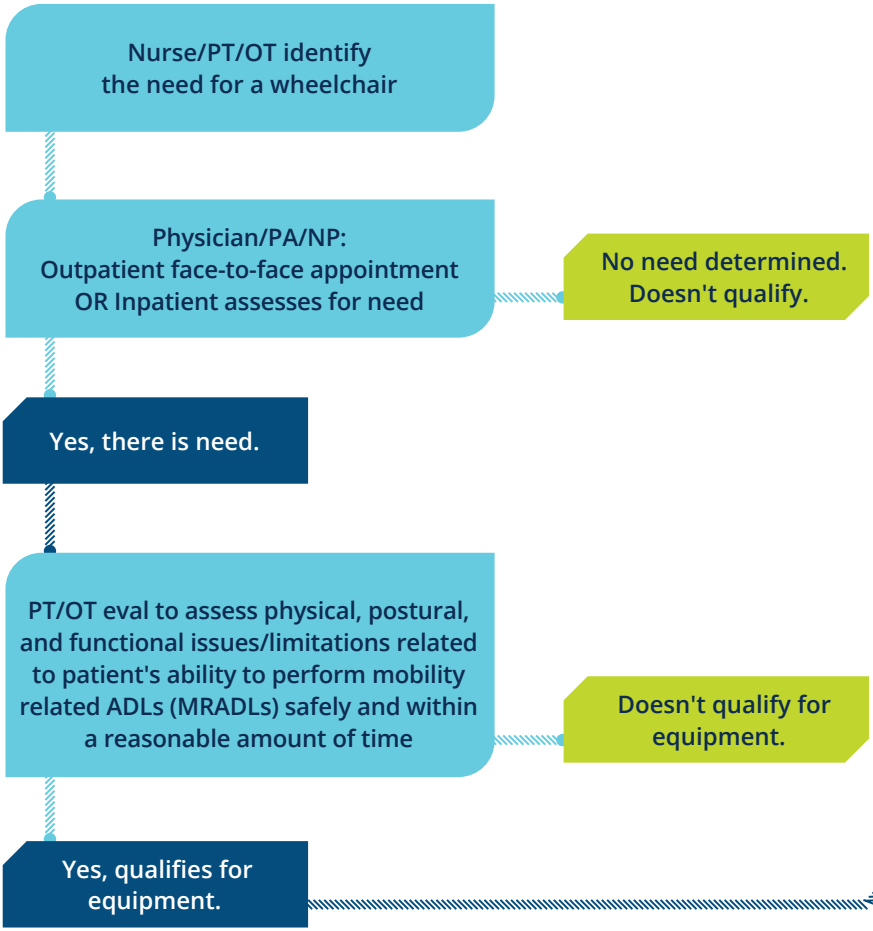

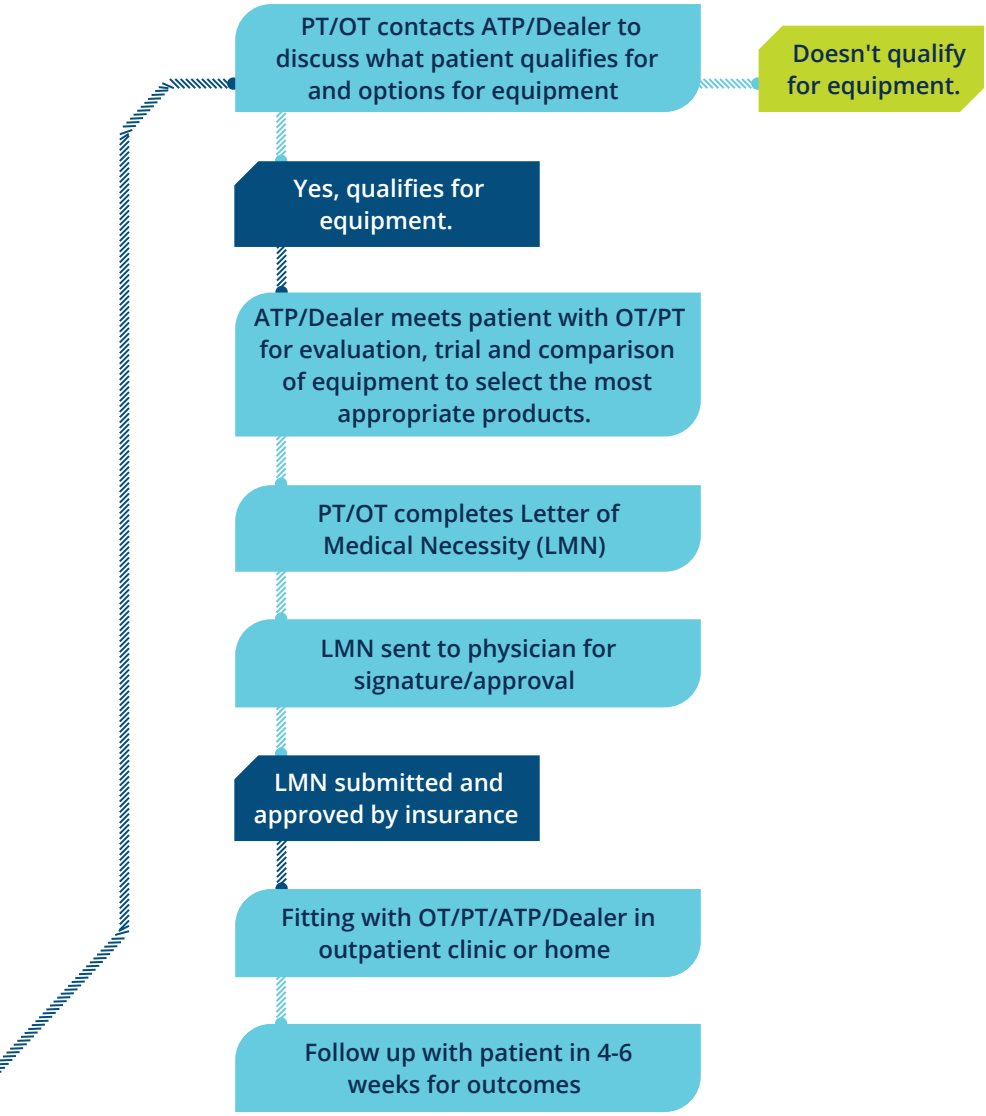

* *This guide will help you more easily identify the most appropriate mobility device.*

Manual Wheelchair Comparison Chart

	Standard	Standard Hemi Height	
Equipment Category:	**DME**	**DME**	
Medicare Code:	**K0001**	**K0002**	
Meant for long-term sitting?	No	No	
Dimensions:			
Wheelchair weight without legrests	>35 lbs	>35 lbs	
Seat width: standard	16", 18", 20"	16", 18", 20"	
Seat depth: standard	16"	16"	
Weight capacity	300 lbs	300 lbs	
Back height	18"	18"	
Lowest achievable seat-to-floor height	21"	19"	
Adjustability to accommodate for postural abnormality:			
Arm rest height	No	No	
Back height	No	No	
Seat-to-back angle	No	No	
Ability to create a fixed tilt	No	No	
Seat-to-floor height (STFH)	No	Hemi height only	
Legrest options:			
Standard, elevating (ELR), & swing-away	Yes	Yes	

Heavy duty wheelchairs
DME K0006-K0007
Same structure and features as K0001-K0003 MWCs, but reinforced for greater weight capacity.

	Lightweight	High-Strength Lightweight	Tilt-in-Space	Ultra Lightweight
	DME	DME	CRT	CRT
	K0003	K0004	E1161	K0005
	No	Only w/ appropriate configuration	Yes	Yes
	33 - 35 lbs	30 - 34 lbs	>45 lbs	<30 lbs
	16", 18", 20"	16", 18", 20", 22"	16", 18", 20"	Customizable
	16", 18"	16", 18", 20"	16", 18", 20"	Customizable
	300 lbs	300 lbs	300 lbs	Customizable
	18"	16" to 20"	24"	Customizable
	17"	13.5" (most 14.5")	17"	Customizable
	No	Yes	Yes	Yes
	No	Yes	Yes	Yes
	No	Yes	Yes	Yes
	No	Yes	Yes	Yes
	Yes	Yes	17" - 21"	Yes
	Yes	Yes	Yes	Yes + more

Note

This chart is for reference purposes only.
Wheelchair features vary according to manufacturer and model.

DME, Short-Term Use Wheelchairs

Short-term *(and/or part-time)* means that the client will only need a wheelchair for a period of time, temporarily during recovery from surgery or mild to moderate injury, and they are not at risk for postural issues or pain. They might use the wheelchair for short periods of time throughout the day and/or for longer distances to reduce fatigue.

Standard MWCs: (K0001, K0002, K0003)
Standard Heavy Duty MWCs: (K0006, K0007)

These wheelchairs are most appropriate for use on **firm, level surfaces** and are **not appropriate for full-time/long-term use**.

Considerations	Why it matters
Minimal adjustability if any	Cannot be optimally configured to an individual which can result in decreased comfort, inefficient propulsion, and poor postural support
Front casters and tires are usually solid tires	Solid tires are not designed for uneven terrain, carpet, or sloped surfaces and can increase difficulty of propulsion
Rear wheel position is fixed and rearward	Weight is distributed to the front caster, making the wheelchair harder to push. This wheel position results in an inefficient push stroke, leading to fatigue and risk of shoulder injury over time
Heavy	This makes ANY self-propulsion inefficient and puts the user at risk for fatigue and injury
Arm rest height is not adjustable	Inappropriate arm rest height can interfere with propulsion and can affect the overall seated posture. This can also increase the risk of postural deformity over time
Minimal seat-to-floor height (STFH) adjustment if any	STFH affects foot propulsion

Manual Recline WCs: (E1225/E1226):

These wheelchairs are similar in features to standard WCs, but provide the option of changing the seat-to-back angle. The back support has an extension that supports the head posteriorly when reclined.

Considerations	Why it matters
Heavier due to hardware, back height, elevating legrests, anti-tip bars	Makes it more difficult to self-propel and transport
Same consideration as Standard MWCs *(previous page)*	

E1225 = semi-reclining (15° & 80°), E1226 = fully-reclining (80° or greater)

High Strength Lightweight MWCs: (K0004)

A K0004 is similar to a standard wheelchair, but is designed to be somewhat lighter and more adjustable. They are **not intended for full-time/ long-term use**, but for part-time or intermittent use on firm, level surfaces. They may be partially disassembled by caregivers for transport.

Considerations	Why it matters
Some have partial rear seat-to-floor height adjustability	This can improve self-propulsion efficiency and/or create a "fixed dump" or seat slope for positioning
Have lower achievable STFH of 14.5" compared to Standard MWCs	This can allow for better foot propulsion for average lower leg length individuals
Some have back cane adjustability	This allows for changing the seat-to-back angle (STBA)
Some have arm rest height adjustability	This allows for improved rear wheel access and postural support

ALWAYS verify K0004 features before ordering. Not ALL K0004 MWC models have adjustability

CRT, Long-Term Use Wheelchairs

Long-term *(and/or full-time)* means that the client will need a wheelchair indefinitely as their primary means of mobility whether independent or dependent.

Manual Tilt-in-Space *for a* dependent wheelchair user

When is a Tilt-in-Space wheelchair appropriate?

- Client is dependent in mobility
- Client is unable to perform independent pressure relief
- Client requires gravity-assisted positioning/repositioning
- Client requires postural support, head and trunk control, and accommodation of postural asymmetries
- The goal is to increase sitting tolerance/endurance
- Client needs improved line of sight due to forward head posture
- Client will benefit from trunk support and open thoracic posture for increased respiratory function
- Client requires safe positioning for feeding/gravity-assisted swallowing

✱ ***A manual tilt-in-space wheelchair requires a PT/OT evaluation, justification that other manual wheelchairs are not appropriate, and an ATP involved in the process.***

Refer back to page 11 and the list of appropriate users & list of potential risks to a wheelchair user that a CRT MWC can address.

K0005 Ultra lightweight MWC *for an* independent user

This is **THE** manual wheelchair for a full-time wheelchair user with goals to be active at home and in the community. These wheelchairs can be individually configured to meet the needs of the wheelchair user and optimize function and propulsion. They are designed to be used on indoor and outdoor surfaces in the community and can be folding or rigid.

A K0005 wheelchair is the BEST PRACTICE for any full-time wheelchair user!! The K0004 is never "good enough."

CRT Ultra Lightweight Manual Wheelchairs

Requirements:

- Client is a full-time/long-term wheelchair user
- Client requires customization such as axle configuration, wheel camber angle, front and/or rear seat-to-floor height (seat slope), or WC frame size that can't be accommodated by a K0001-K0004
- This requires an evaluation by a PT/OT, a letter of medical necessity, and the involvement of an ATP in the equipment selection process

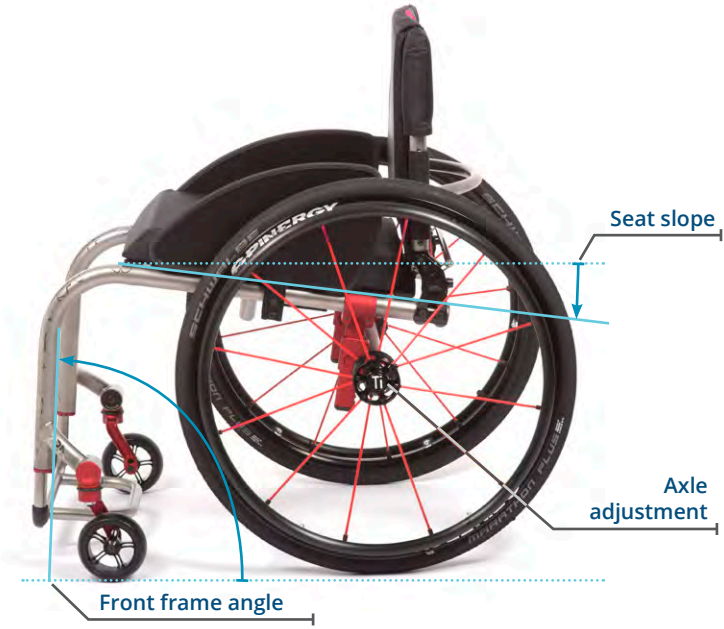

Rigid vs folding frame

Rigid

- One-piece frame is comprised of bent and/or welded tubes
- Leg rest hangers are integrated

Folding

- Two-piece frame connected with cross bars for folding
- Removable/swing-away leg rests

Why use a rigid frame?	Why use a folding frame?
Generally lighter weight due to less parts. This is significant for push efficiency and loading into vehicles. Less parts can increase durability	User choice! If someone has been using a folding WC for a long time or just likes folding frame wheelchairs, then that is reason enough
More rigid equals more efficient. Folding frames will flex more which takes energy away from the push	Standing, or partial standing, transfers are easier with swing-away leg rests. There are options on rigid frame wheelchairs, but generally a folding WC is easier for these clients
Rigid frame wheelchairs fit in small areas as well! Consider a fold-down back & quick release wheels	People who propel the wheelchair with their feet. There are options for rigid frame wheelchairs, but they tend to require custom builds
	If there is need for elevating leg rests
	Transport efficiency for bariatric clients

Tips for Justifying a K0005 Ultra lightweight MWC

HOW CAN I MAKE SURE THAT MY CLIENT GETS THE MWC THEY NEED?

Qualification for a K0005 is **functionally based**, not diagnosis based. Rule out a K0001-K0004 by documenting why the "least costly" alternative is not effective. Include a description of the client's routine activities and whether they are fully independent in the use of the wheelchair.

1. Use **objective tests** and measures such as a Wheelchair Propulsion Test

   Compare an optimally configured ultra lightweight wheelchair vs. lower-end wheelchair; time propulsion over a fixed distance; count push strokes; differentiate quality of propulsion, document pain, pulse oximetery
2. Consider **safety, efficiency, and ability** to **independently** complete all mobility related activities of daily living (MRADLs) **all day, every day**, with a lesser MWC
3. Consider the need to configure an ultra lightweight wheelchair for **better posture and mobility**
4. Document the **unique features of a K0005 and *why* they are needed**:

   - Adjustable front and rear seat-to-floor heights
   - Individualized seat and frame width and depth
   - Axle adjustability
   - Seat slope
   - Rear wheel camber
   - Seat back angle

Examples why the features may be needed:

Adjustable axle plate is required for center of gravity adjustment to allow for efficient propulsion and decreased shoulder pain from 6/10 to 0/10.

Adjustable axle needed to allow for efficient propulsion compared to a lesser WC: Person took 35 push strokes & 5 min to propel 40' to bathroom, compared to ultra lightweight WC, where it took 15 push strokes & 2 minutes.

Additional seat size options are required as my client of 6' and 170 lbs does not fit the standard configurations of lower-end manual wheelchairs.

HOW CAN I GO ABOUT GETTING THE APPROPRIATE WC WHEN CLIENT IS DISCHARGED SO EARLY?

This is a common challenge with inpatient rehab stays getting shorter and shorter, but it is still possible.

The first thing to consider when doing your initial evaluation is whether or not your client may need a wheelchair full-time when going home. If the answer is "yes," treat your evaluation as if they are going to need a K0005 wheelchair, even if they initially go home in a lower-end manual wheelchair for a short period of time. ***What do I do?***

1. **Plan of Care** - Include in the Plan of Care that the client is to follow up with the next clinician in the continuum and the supplier after discharge to obtain the ultra lightweight MWC that is recommended.
2. **Talk to your client** - Empower them by explaining that they are going home in a **rental** wheelchair that will turn into a purchase in 12 months. Encourage them to talk to the next therapist in the continuum about getting a better ultra lightweight wheelchair.
3. **Rule out a K0001 - K0004 WC** - Document using the methods outlined on page 22. Documentation must show why the “least costly” alternative is not effective.

The rental wheelchair or demo WC from the dealer/ATP will buy time for completing the evaluation and procurement process so your client can get the wheelchair they deserve.

Remember to consider the 5-Year Rule. A client in a lower-end wheelchair that isn’t going to meet their long-term needs is not the most beneficial option to them. With the useful lifetime rules, a client must remain in the same WC for 5 years (longer with some funding sources), unless they have a change in medical condition that warrants another new wheelchair.

**** Mobility needs upon discharge need to be considered FROM DAY ONE of the rehab stay!!!***

K0005 Ultra lightweight MWC Configuration

WHAT ARE THE FUNCTIONAL CHARACTERISTICS OF A HIGHLY-CUSTOMIZABLE WC?

Configuration options	Why it matters
Front seat-to-floor height (FSTFH) *Pages 27-28*	Important for safe functional use during propulsion and transfers
Rear seat-to-floor height (RSTFH) *Pages 27-28*	Determines rear wheel accessibility and efficiency of propulsion
Seat slope: difference between the FSTFH & RSTFH *Pages 29-30*	Important for postural stability and optimal wheel access for self-propulsion
Foot support-to-seat length *Page 33*	This affects LE positioning, femoral contact for pressure redistribution, and foot plate clearance
Front frame angle *Page 34*	Legs and feet brought closer to the body make the overall WC footprint smaller, making it easier to get close to things for reaching
Overall frame length *Page 60*	A proper frame length ensures the wheelbase is proportional to the client
Seat width *Page 35*	Affects posture, wheel access for propulsion, and environmental access
Seat depth *Page 38*	Optimizes posture and pressure redistribution
Seat back height *Page 40*	An optimal back support height will balance postural stability and functional reach for ADLs
Seat-to-back angle *Page 41*	This angle provides optimal pelvic and trunk support for stability and daily function
Horizontal & vertical rear wheel axle position *Pages 42-45*	This can be configured for optimal center of gravity and wheel access for the most efficient push stroke
Rear wheels *Page 49*	Affects propulsion, rolling resistance, and weight
Rear wheel camber *Page 50*	Used to increase lateral stability and turning efficiency
Casters *Pages 51-52*	Stability, rolling resistance, and maneuverability

A K0005 is an individually configured, tailor-fit wheelchair. It is not merely small, medium, or large.

Measuring for a K0005 Ultra Lightweight Wheelchair

The features of a manual wheelchair will significantly affect the client and performance of the wheelchair in terms of postural support and wheelchair stability, maneuverability, and ease of propulsion.

This is why the ability to configure a K0005 wheelchair is best practice for a person who uses a wheelchair long-term.

**** Relating the client's measurements to the wheelchair specifications is key!***

Anatomical measurements
from mat evaluation

Wheelchair measurements
to be performed with the person in a WC seated in their desired position of propulsion

Seat-to-floor height (STFH)

The front and rear seat-to-floor height is not always the same in an optimally configured K0005 MWC. *(visual on next page)*

Front STFH measurement

WC measurement is from where the leading edge of the seat upholstery meets the frame of the wheelchair to the floor.

Anatomical measurement is meant to match the dimensions of the lower leg along with the foot plate to ensure lower extremity support and accessibility.

- An appropriate height will provide proper support of the thighs and lower legs to optimize stability and pressure redistribution

Rear STFH measurement

WC measurement is from the wheelchair frame seat tube to floor, right in front of the back post. You must have the client in a WC to determine the RSTFH

- This height is meant to ensure appropriate access to wheel handrims for optimal propulsion. Optimal RSTFH is when the finger tips of the client touch the axle of the wheel. *See "Vertical axle positioning" (page 45) for more*
- A lower rear STFH relative to the front STFH can provide increased postural stability for those with impaired trunk control

Foot plate height measurement

WC measurement is the distance from the top of the footplate to the seat upholstery. It should be equal to the lower leg length minus the height of the cushion. *See page 33 for more.*

Always consider the wheelchair seat cushion thickness and clearance of tables and desks when measuring STFH!

For determining both the front and rear STFH, keep in mind that some seat cushions may have a different thickness in the front and the rear of the cushion. The difference will affect seat slope if not accounted for.

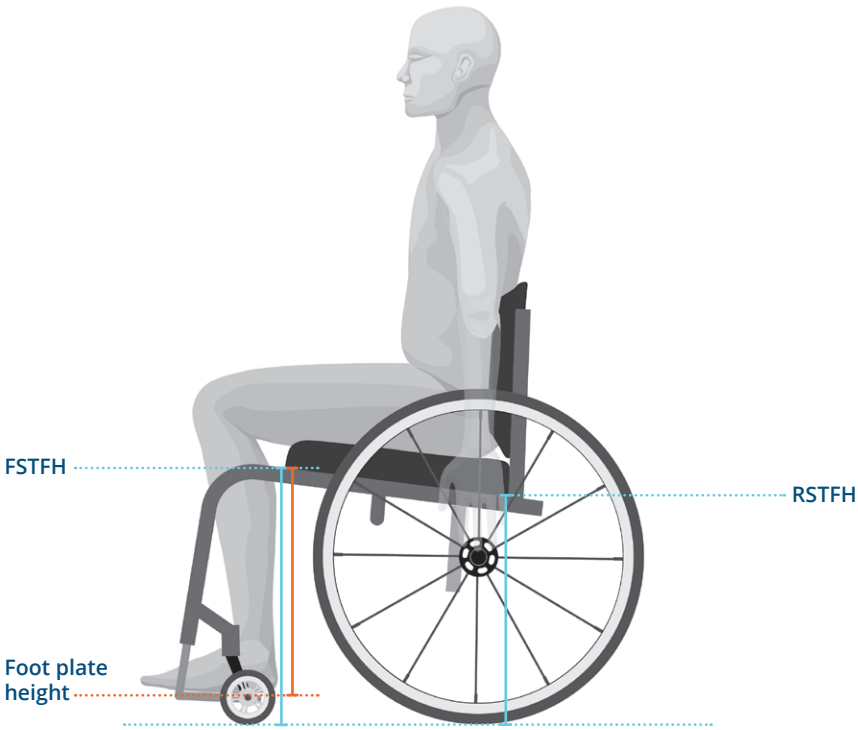

* *USE A DEMO! All WC measurements should be completed with the client in a demo wheelchair! The demo does not have to be perfect for your client, but it will give the best starting point for fitting them.*

Seat slope

The seat slope is the difference between the front and rear STFH and is important for postural stability and optimal wheel access for propulsion.

- The greater the seat slope from front to back, the more passive stability is provided for those with decreased trunk control
- Consider available hip and knee range of motion when determining seat slope
- Insufficient seat slope may make sitting up difficult while too much seat slope may make transfers more difficult

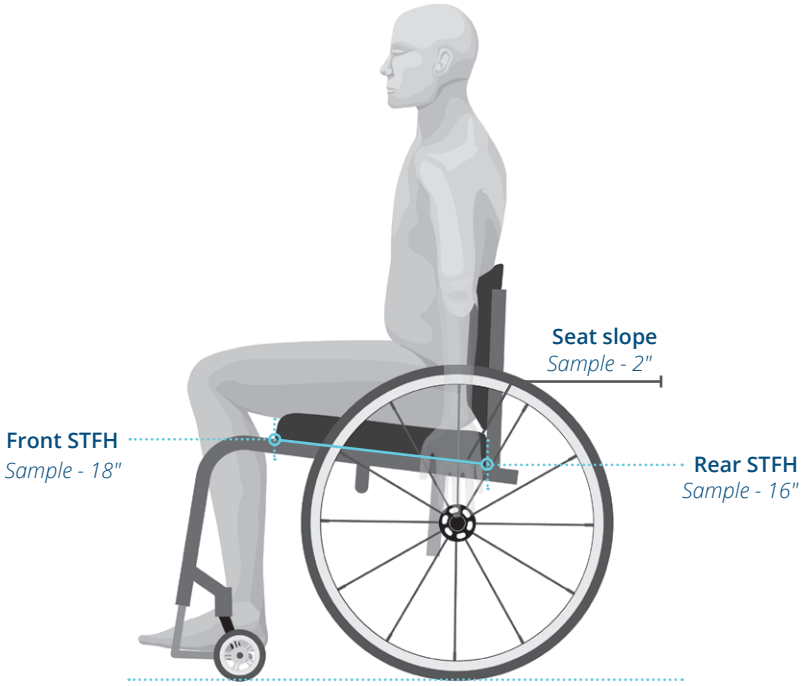

Most adults need about 2" seat slope if they propel with their UEs. Foot propellers need 1/2" to 1" seat slope.

Utilizing an ergonomic (ergo) seat

Sometimes a conventional seat slope won't work for these reasons:

- There is an insufficient range of motion (ROM) at the hip and/or knee required for the slope
- The individual requires 3" or more seat slope for stability and rear wheel access
  With 3" or more of seat slope an acute hip-to-back angle is created so even a WC user with normal ROM cannot access the rear portion of the seat
- Individual may feel unstable
- Individual complains of pain
- Individual complains of sliding forward

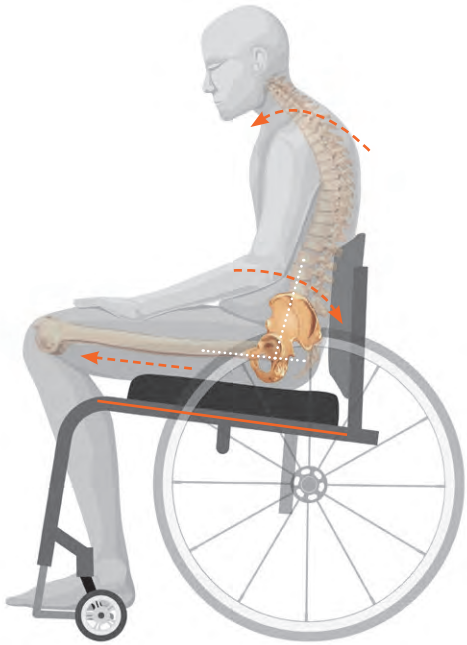

Example of limited ROM at the hip: Individual slides into an abnormal posture by shifting their legs and pelvis forward to open the angle back up for comfort. Then, they slouch forward to maintain their center of gravity/stability.

Ergo seat

An ergonomic seat is intended to match an individual's shape while providing a lower RSTFH relative to the front. The RSTFH is maintained for a length of the frame before the seat tubing ascends up to the FSTFH specified.

- This promotes an upright posture by maintaining a more open STBA compared to a conventional seat slope
- It allows for better stability, positioning, and pressure distribution by creating a stable, neutral place to seat the pelvis and load the femurs
- Allows improved rear wheel access for more efficient propulsion
- It optimizes total surface contact area, increasing pressure redistribution for the bony prominences and encouraging pelvic stability
- The shape allows the thighs to be more level, making it easier to carry items during daily tasks

Ergo seat measurement

WC measurement is from the back post of the WC to the point in the tubing where you want it to start to bend upwardly.

Anatomical measurement is from behind the hip to the greater trochanter, plus 1 - 2".

** Instability from an increased seat slope can be offset by using an ergo seat when clinically appropriate for the user.*

The idea is to contain the ITs within the flat ergo well. Since the frame is providing the positioning, the goals of the cushion need to be consistent with the goals of the wheelchair. The cushion needs to follow the contour of the frame and provide a flexible pressure relieving interface between the frame and the wheelchair user.

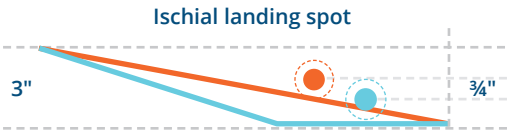

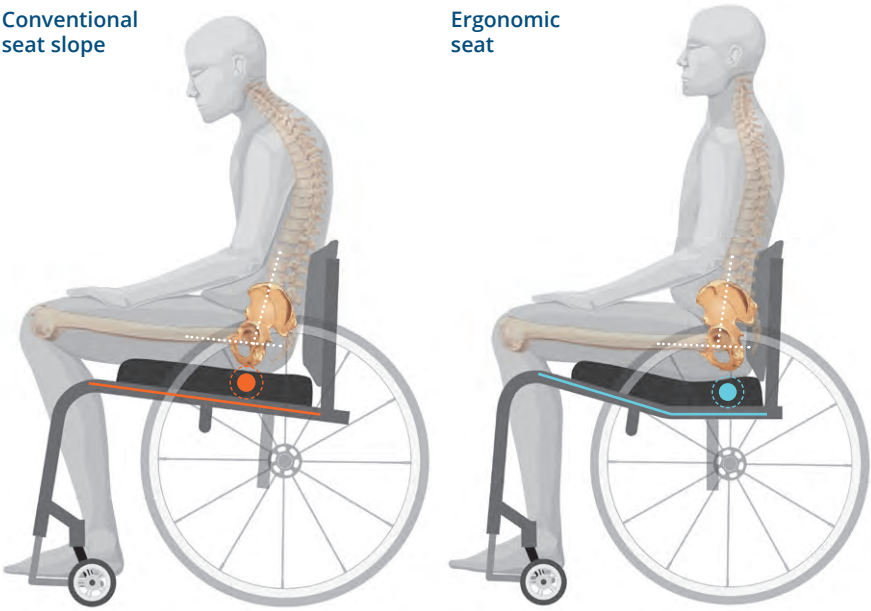

Foot support-to-seat length

The foot support-to-seat length is also known as leg rest length. It is important to provide lower extremity support, ensuring optimal femoral contact at the seat surface and clearance of obstacles at the footplates.

It is important to use a demo wheelchair with the person in the desired position of propulsion, to get the most accurate measurement.

Foot support-to-seat - too short

- This can raise the knees which reduces clearance for under tables and increase slope of the upper legs which can make it harder to carry items
- Can reduce femoral contact and increase peak pressure at the ITs

Foot support-to-seat - too long

- Lower legs are unsupported and pressure increases distal femur. The client may slide forward to reach the foot support, and by doing so, shift into a posterior pelvic tilt
- This can increase risk of a postural abnormality and peak pressures at the seat and back support surfaces

Front frame angle

Front frame angle is critical to provide appropriate support to the lower extremities.

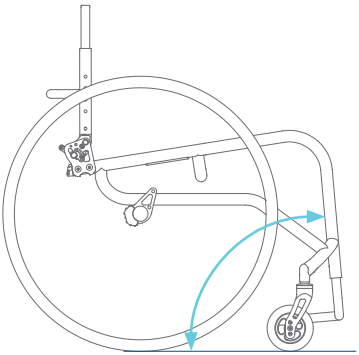

This should be set by asking the client where they want their feet (further in or out) and have the client place their feet where they want them. The front frame angle selected should be the one where the ball of the client's foot can rest on the foot rest tube. Measuring for the overall frame length is a more accurate way of determining the appropriate front frame angle for a client. *See page 60 for more.*

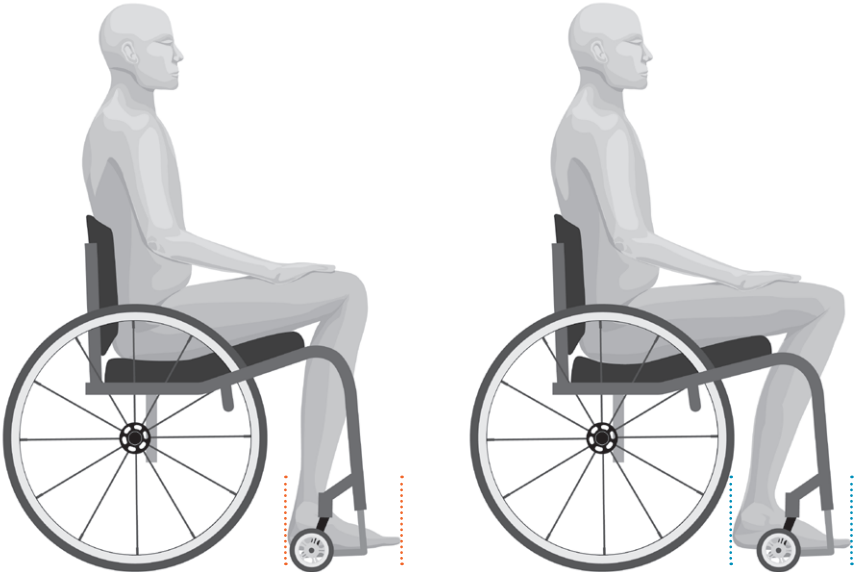

Example visual: A tall individual may need to tuck their legs in tight under the WC due to their longer lower leg length. This allows them to still clear the edges of tables, desks, counters and keep their overall wheelchair footprint smaller. They must have an available ROM at the knee for this.

Seat width

Measuring the appropriate seat width is critical for postural stability and propulsion efficiency.

Seat width measurement

WC measurement is outside to outside of seat tubes at the back post. This should match the client's anatomical measurement.

Anatomical measurement is the widest point of the body at the hips including all residual tissue.

- The seat width affects the overall width of the wheelchair along with wheels and handrims

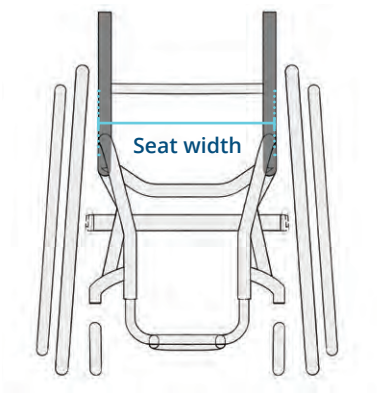

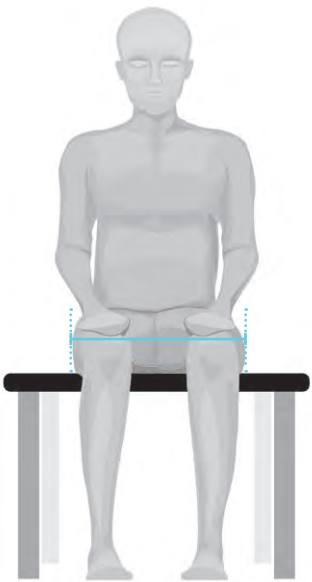

Seat width - too narrow

- This can lead to unwanted pressure and postural abnormalities due to compensation

Seat width - too wide

- This can make it difficult to access the handrims and result in inefficient propulsion which can cause upper extremity injuries over time
- Negatively affects environmental accessibility and positioning/posture in the WC

Front seat width

This measurement allows you to taper the front of the seat to match the client's posture. Front seat width can also be referred to as the seat taper.

Not all client's need to have a tapered seat. However, client's whose LEs are much narrower than their hips may benefit from front seat taper to:

- Provide better LE positioning with better overall WC fit
- Allow the ability to get closer to things for transfers and reaching
- Provide a smaller overall footprint for accessibility
- "See me, not the wheelchair"

Front seat width measurement

WC measurement is inside of front frame tube to inside of opposite front frame tube.

Anatomical measurement is the width across the client's legs across the distal end of the femurs, proximal to the knees. This width should match the front seat width measurement.

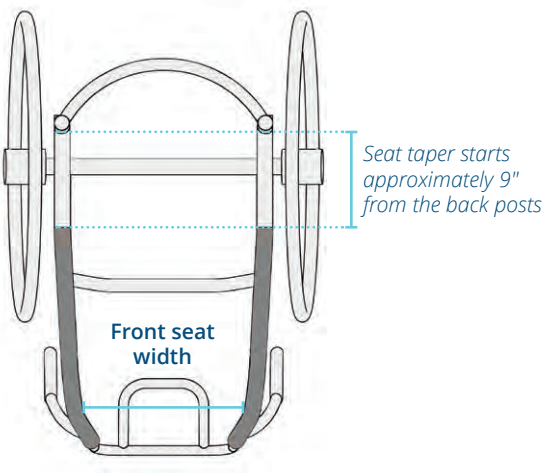

Footrest width

This measurement allows you to match the footplate with a LE positioning that is comfortable for the client. Someone who has large legs or LE edema may not need any front seat taper. Someone whose lower legs are smaller than their hip width may need some leg rest taper.

Footrest width measurement

Select a width that allows for adequate space for the client's feet and tapers to the client's desired position. Measure across both the client's feet with shoes.

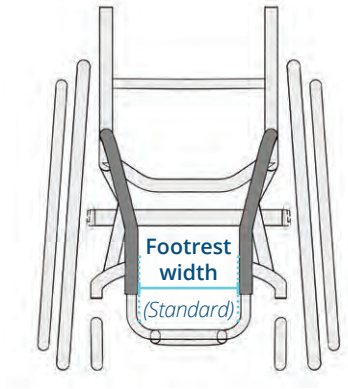

Standard - Inside of front frame tube to inside of opposite front frame tube

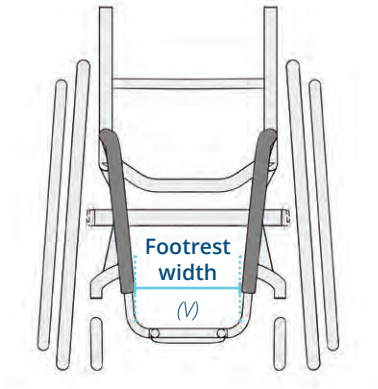

V - Inside of front frame tube to inside of opposite front frame tube 2 ½" above footrest

Footrest width - too tight

- The tubes press on the client's legs or feet
- The footplate may not be wide enough to allow the feet to pivot for transfers if the client leaves their feet on the footplate for transfers

Footrest width - too loose

- The client does not have adequate foot/LE positioning coming from the WC. Legs and feet may lose position, especially with spasticity or going over bumps
- This can decrease environmental access by increasing the WC footprint

Seat sling depth

The goal of seat sling depth is to maximize support and pressure distribution without interfering with LE positioning. An appropriate depth will provide optimal stability in the wheelchair.

Seat depth measurement

WC measurement is from the back posts to the leading edge of the seat upholstery.

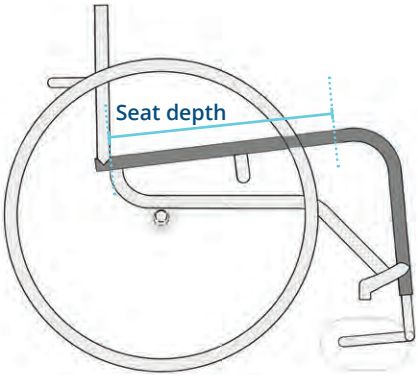

Anatomical measurement is from behind the user's hip including residual tissue to their popliteal fossa AND should account for where they want to position their legs, more or less tucked.

Seat depth - too short

- Decreases femoral contact for pressure distribution which can lead to pressure injury

Seat depth - too long

- This may result in sliding forward to decrease pressure behind the knees, resulting in poor posture and decreased propulsion efficiency

Frame depth

The frame depth is measured from the front of the back cane to the front frame bend. The center point of the trailing front caster is usually lined up with the front frame bend, resulting in a balanced wheelchair for optimal stability and propulsion.

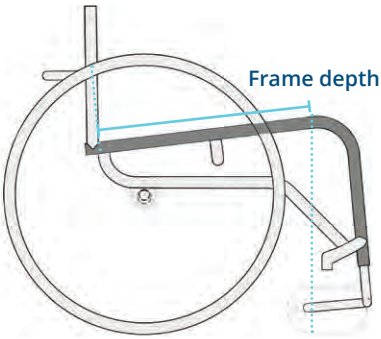

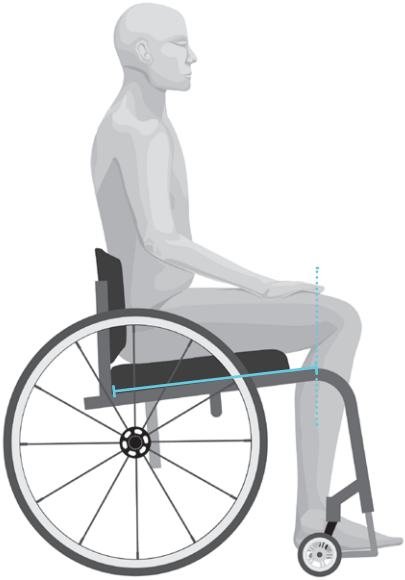

Frame depth on a rigid wheelchair should be set so that the bend in the frame lines up with the bend in the user's leg. This results in a balanced wheelchair because the front casters will move forward proportionally to the end user's body when frame length is added to fit their shape.

If you notice anterior instability, caster loading, or impaired maneuverability, check the frame depth!

Seat back height

Proper back height in a K0005 is important for providing appropriate postural support and upper extremity function for propulsion.

Seat back height measurement

The WC measurement is from the top of the back post to the top of the seat tube at the back post.

Select a seat back height that allows the prescribed back support to reach desired height to for adequate postural support.

An optimal back support height is determined by the lowest point of the trunk needing support for stability and function.

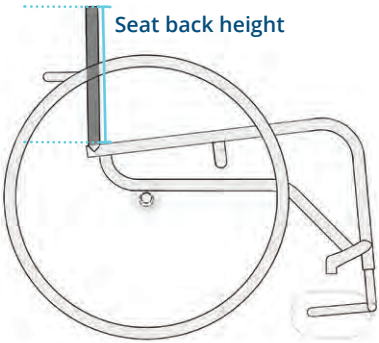

Back support - too high

- May limit scapular movement during propulsion which impacts upper extremity range of motion

Back support - too low

- May result in a feeling of instability
- Individual may slide into a posterior pelvic tilt seeking stability. This can increase peak pressures and promote abnormal posture

Seat-to-back angle

The seat-to-back angle (STBA) is critical for postural support and assuring the best position for efficient propulsion. Most adults need the STBA open a few degrees to allow room for their normal spinal curves. This angle can be further adjusted to the client's needs using adjustment on the back support mounting hardware and on the wheelchair itself if available.

STBA measurement

On the WC, seat-to-back angle is measured from the front of the back post to the floor.

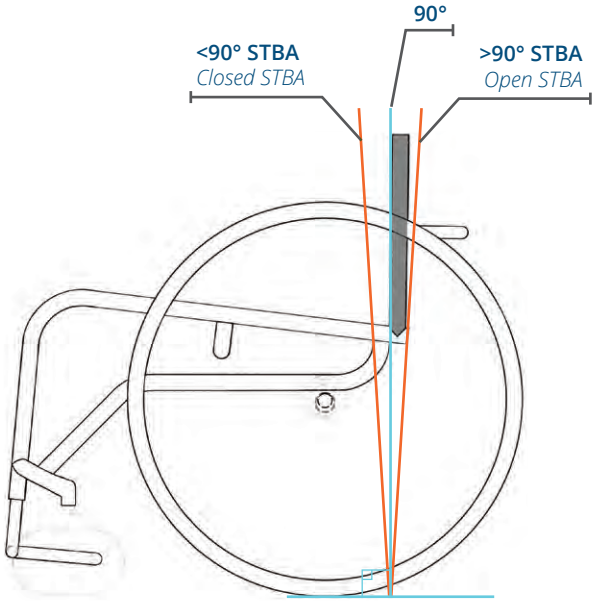

- Greater than 90° may improve postural stability for individuals with impaired trunk control and/or limitations in hip range of motion. 92° - 93° may provide the lumbar area support for promoting normal spinal curves.

Position of the rear wheel axle

The horizontal and vertical positions of the rear wheel axle, have a significant impact on all of the functional characteristics of the wheelchair such as:

- stability
- weight distribution
- turning radius
- wheel access

This also impacts the propulsion style, propulsion efficiency, and access to the environment for the wheelchair user.

Keep in mind that a forward axle position reduces the forces needed to propel and the rear axle should be set for the center of mass of the client.

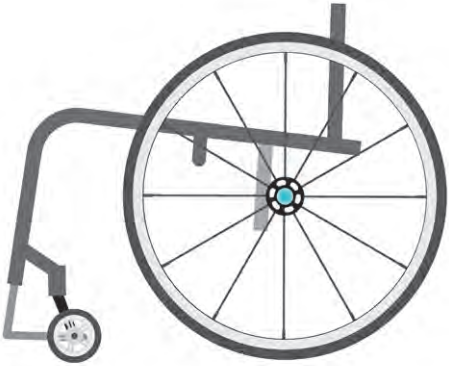

Every full-time, long-term wheelchair user should have the rear wheel positioned uniquely for them to prevent injury and ensure full access to their environment.

Horizontal axle positioning

The horizontal axle position will determine the wheelchair center of gravity (COG).

When the axle is under the center of mass of the client, the majority of their weight is on the large rear wheel. Ideally, this is about 80% of their body weight. If weight is not on the rear wheels, it will load the front casters, requiring more force to roll the WC.

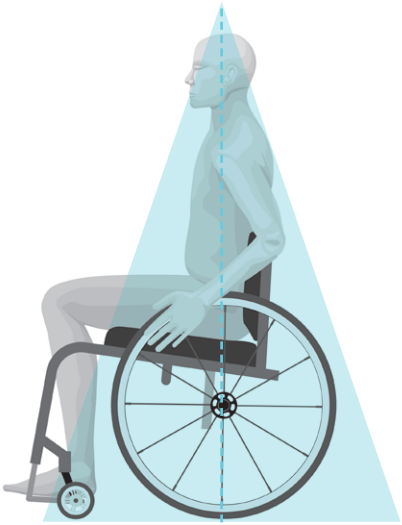

Horizontal axle measurement

WC measurement is the horizontal distance from the front of the back post to the center of the rear axle of the wheelchair.

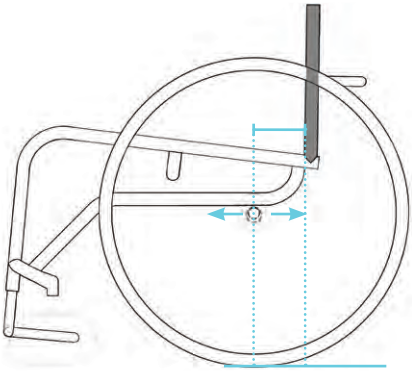

Best practice is to position the rear wheel as far forward as possible without unsafe rear instability or caster interference.

Forward axle
Rearward center of mass

Rearward axle
Forward center of mass

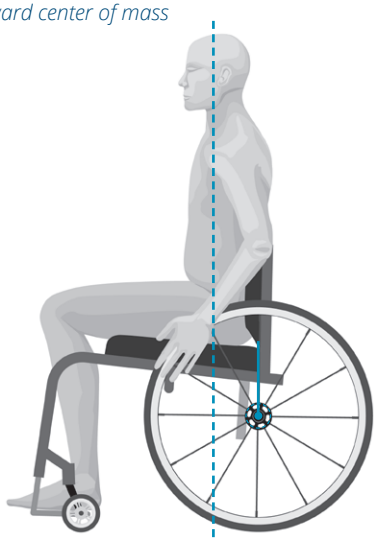

Benefits
Allows for more efficient upper extremity position for propulsion
Increases frontward stability of the WC. WC is less likely to tip forwards when rolling down, reaching forward, or scooting forward for transfers
Decreases turning radius and overall footprint of the wheelchair, making it easier to navigate small spaces
Increases ease of performing a wheelie to maneuver obstacles

Considerations
If too far forward, it increases the risk of wheelchair tipping backwards

Benefits
The WC will be more stable in the rear*

Considerations
Less efficient upper extremity position to reach rims, could lead to injury over time
Increases the forces necessary to turn the wheelchair
Increased rolling resistance makes it harder to propel
Increases difficulty of performing a wheelie to maneuver obstacles
Increases the turning radius and length of the wheelchair footprint, making it difficult to navigate small spaces
*Increases risk of WC tipping forward

Vertical axle positioning

Proper vertical axle position allows for optimal upper extremity position for propulsion. Vertical axle position determines RSTFH measurement and therefore affects seat slope.

Lower axle (on axle post)
Higher RSTFH, less seat slope

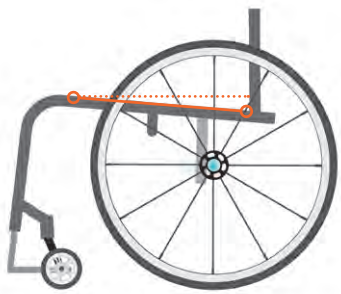

Higher axle (on axle post)
Lower RSTFH, more seat slope

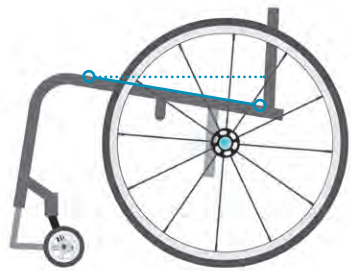

Vertical axle measurement

The vertical position of the axle is determined by how high or low the RSTFH of the wheelchair needs to be. Remember to account for cushion thickness here.

For client's with hand function, finger tips should touch the center of the rear axle when sitting upright with arms to the side. For those with tetraplegia, use the thenar eminence instead as your reference point.

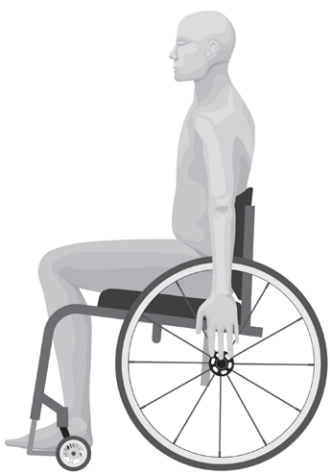

* *Effective / efficient propulsion is affected if the vertical position is too high or low, and it may place the upper extremities in a position that could cause injury over time.*

MWC propulsion

The wheelchair configuration is critical for optimal push efficiency. The goal is long, smooth strokes to decrease the frequency of pushing.

When propulsion forces and repetitions are minimized, the preservation of upper limb function is maximized. This reduces the risk of discomfort, pain, poor function, and injury.

The ideal seat height and axle position is when the angle between the upper arm and forearm is between 100° - 120° when the hand is resting on the top center of the pushrim.

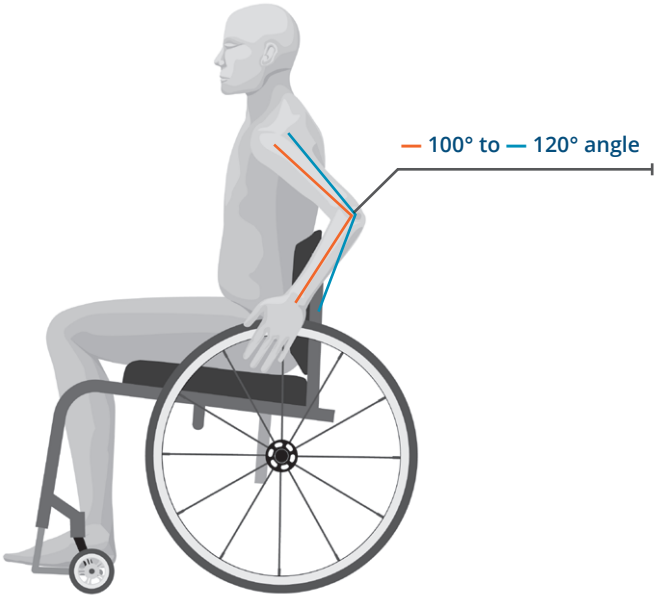

Propulsion patterns

There are four push stroke techniques consisting of a push phase and a recovery phase. The pattern of recovery *(release to contact)* is the largest difference between techniques.

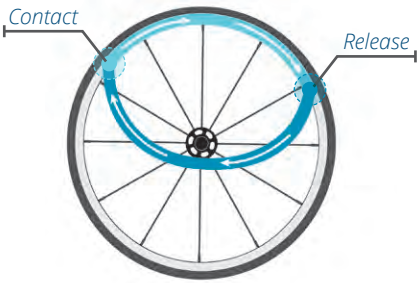

Semicircular

Single loop over

Arc

Double loop over

The semicircular pattern is encouraged because:

- It promotes better biomechanics
- It is associated with lower stroke frequency
- It promotes more time in push phase than recovery phase
- The hand follows an elliptical pattern with no quick changes in direction and no extra hand movements

Single loop over is the most common pattern for individuals with paraplegia.

Propulsion efficiency

A forward axle position allows for longer, smooth push strokes which will also decrease frequency of pushes.

Forward axle -
Distance between contact & release

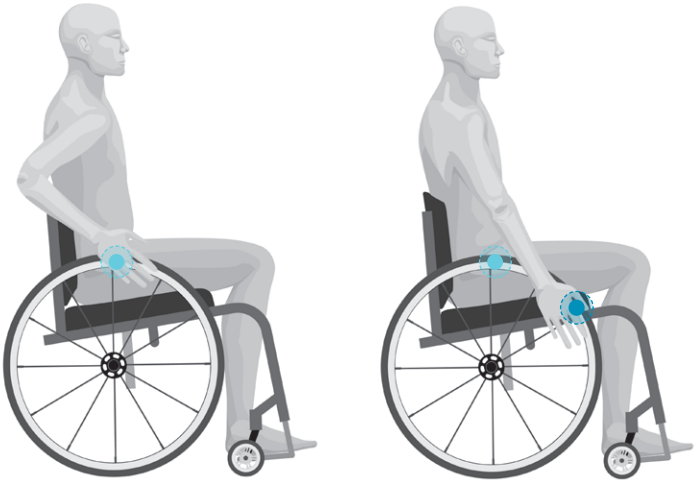

A rearward axle position reduces the user's ability to get a long stroke since they are starting the push phase near the front of the rear wheel.

Rearward axle -
Distance between contact & release

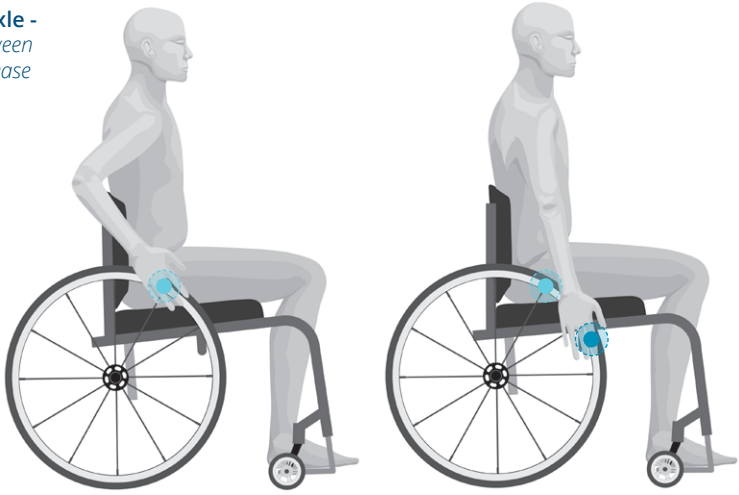

Rear wheel options

In terms of wheel type and size, the wheels are important to minimize rolling resistance, decrease weight, and increase reliability of the system.

Rear wheel size

Diameter of the wheel is determined by the optimal RSTFH for a client. For example, a taller person may need a larger diameter wheel.

Rear wheels - too large

- The seat-to-floor height and access to the hand rims may be compromised
- A larger diameter wheel may interfere with transfers since they create a little bit bigger hurdle to transfer over
- A larger wheel will increase the length of the wheelchair footprint. This could negatively affect client reach, ADLs, and wheelchair maneuverability

Tire styles

Pneumatic tires: *(filled with compressed air)*

- Weigh less
- Better shock absorption
- Need to be inflated properly for optimal propulsion

Non-pneumatic tire:

- May be solid or pneumatic with flat-free inserts
- Often used when a flat-tire could be a safety risk because the ability to properly maintain pneumatic tires is in question

Choose a tire that is lightweight to decrease the initial force required to turn the wheels. Low tread and the least amount of surface contact to the ground decreases rolling resistance.

Rear wheel camber

Camber is the inward tilt of the rear wheel. The camber angle affects lateral stability and the efficiency of propulsion as well as rear wheel access. When performing tasks that require leaning outside the footprint of the wheelchair, increased camber will increase stability and promote maintaining an upright position in the wheelchair.

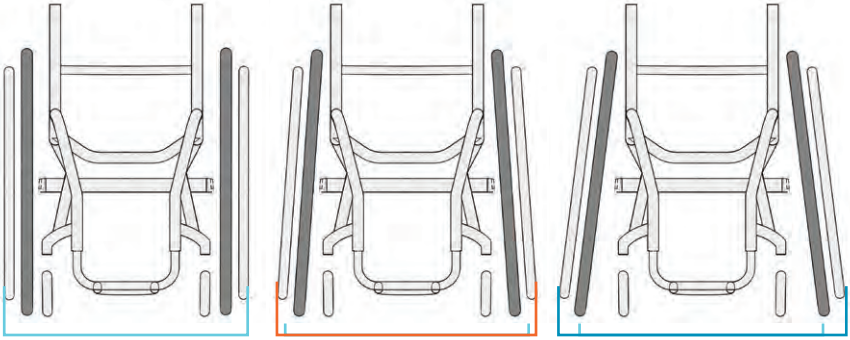

Sample 0° *Sample 4°* *Sample 7°*

Most adult wheelchairs used for daily use have 0° - 3° of camber while pediatric sizes may have more to improve wheel access. Wheel camber decreases proximal distance to the user at the top for wheel while increasing distance between wheels at ground level.

Sports WCs have greater than 3° degrees camber for stability. The extra wide camber also increases the ease of propulsion (longer leaver arm).

Rear wheel spacing is the distance between the top of the wheel and the back post. The goal is the narrowest possible configuration to allow the most accessibility.

- Different amounts of rear wheel spacing is required for different camber angles and wheel/tire configurations

Remember that adding camber will affect the overall footprint of the wheelchair.

Caster options

Casters affect rolling resistance, stability, and maneuverability. The key is to have proper axle adjustment to get most weight through the rear wheel and decrease rolling resistance.

Caster size

Caster size affects FSTFH and seat angle of the wheelchair.

Small diameter caster
Lower FSTFH

Large diameter caster
Higher FSTFH

Most WC manufacturers will tell you which available caster sizes will work when you are selecting the front frame angle and STFH.

The old way of thinking is that large casters roll easier. However, the correct way of thinking is that less weight on the casters allow them to roll easier. The key is to decrease as much contact with the ground without compromising stability, while also having proper rear axle adjustments (rear COG) to get the most weight on the rear wheel.

The goal is always to minimize rolling resistance. To achieve this, choose a caster shape and size with the least contact surface to the ground.

Casters - too large

- May hit the user's feet
- May interfere with the footplate and the rear wheels

Casters - too small

- May make it difficult to go over obstacles

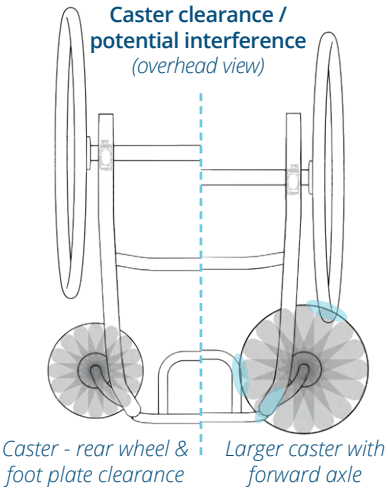

Caster shape

Caster shape is also significant to their ability to roll. The less the caster touches the ground the less rotational inertia it takes to make the wheel turn. Most of the time, the wider the caster is, the more contact it has with the ground. Some styles have a tapered shape so that when on a flat surface the caster contact point is optimal. Then if the user rolls over a crack or into a softer surface (e.g. dirt, gravel) they have more surface area to help them when they need it.

Caster - too narrow

- May be difficult to manage rough terrain
- May have increased risk of getting caught. *Example: cracks in sidewalks*

Caster forks

Caster forks provide alignment and adjustment features of the casters for stability, and maneuverability based on client's needs and preferences. Suspension caster forks provide shock absorption.

Additional K0005 Ultra Lightweight MWC options

There are a variety of additional options for K0005 wheelchairs because they are truly the most customizable MWC option. Some are for function, but may not be necessary for every client while others are more client preference.

Configuration options	Considerations
Handrim and wheel lock style	Affect use and propulsion *(especially for those with limited dexterity),* otherwise may be heavily dependent on client preference
Foot plate style	Affects safe foot placement/positioning Options may include rigid, adjustable, swing-away, flip-up, and flip-back
Arm rest (optional) style, height, attachment	May be needed to promote postural stability May provide a resting place to reduce fatigue Height can affect optimal wheel access Style can affect reaching and transfers Options may include: adjustable, swing-away, flip-up, and removable. Full and desk length
Side guards (optional) adjustable and/or removable	Consider for postural support and stability Can provide protection from the wheels during use Reducing wheel resistance if wheels come in contact with cushion, clothing
Anti-tips	Safety feature for some environments and terrain. May be fixed, flip-up, removable
Push handles	Will the client be pushed a fair amount of the time? Can added push handles help them maneuver the WC before and after transfer?

The setup of a K0005 MWC demands knowledge of client's history and potential for function. If not done correctly, the client may not realize that they are at a disadvantage, and it can have long-term effects. Understanding wheelchair types and setup to maximize function will enhance their life and also decrease the risk for complications.

Power Assist

WHAT IS A WHEELCHAIR POWER ASSIST DEVICE?

Power assist is the use of technology to assist with the “push” phase of independent manual wheelchair propulsion. This technology can reduce the push frequency and force required for effective mobility.

Power assist can be hub-mounted or rear-mounted. Both styles allow for the rear wheels to be removed, but the weight of the hub-mounted devices are significantly more because there are two motors and batteries, instead of one. A rear-mounted power assist does not require pushing to activate it which frees the hands for function.

WHAT TYPE OF PERSON WOULD BENEFIT FROM POWER ASSIST?

Although the common misconception is that power assist is used for clients who have pain in their shoulders from overuse, this is a **REACTIVE** way to use power assist.

What about those wheelchair users who want to be **PROACTIVE** and use power assist to prevent an overuse injury? Some examples include:

- The athlete who wants to continue in her sport and continue working out for years to come
- The office worker who uses power assist to wheel several blocks to his office, to maintain his energy throughout the day
- The elderly gentleman who has suffered a CVA who is a foot propeller and uses power assist for efficiency

Hub-Mounted Power Assist

With this style of power assist, the motors are in the wheels. They are activated through force on the pushrims. That force triggers sensors which signal the motors to propel the wheels forward.

Benefits
Can be programmed for sensitivity, boost, and speed
Very little force is required to activate
Assist is on every push
May offer slope deceleration assist which can help maintain a comfortable speed when going down grades and ramps
Can be used with folding or rigid MWCs
With programming, if there is a strength discrepancy from left or right, it may be able to compensate and maintain the desired path

Considerations
Adds weight to the wheelchair *(up to 22lbs per wheel)*
Wheels need to be removed to facilitate transport in a vehicle
Need to protect the wheels during transport, prevent damage to sensors
When the motors are not engaged *(short distances, select environments)* the wheels add weight to every push
If battery dies, adds resistance to wheels
Modifications to the WC may be necessary such as added hardware and increased WC width, which could limit access to wheels and accessibility to narrow spaces
Also require "power adaptable or power reinforced frame" from manufacturer
Eliminates the ability to use wheel camber
Some users consider adapted vehicles to avoid removing wheels for transport, which is a considerable cost

Rear-Mounted Power Assist

This style of power assist is a detachable, single motor component. It attaches to the wheelchair axle and wearable devices or controllers signal the motor via Bluetooth or switches to start, accelerate, and stop. Turning the WC is still guided by the user's hands on the handrims.

Benefits
Easily removed when transferring MWC into a vehicle, for transport, and charging
On-demand function. Not necessary to have on the WC when not needed *(short distances & around the house)*
Acceleration and top speed are programmable, allows for safe operation
Programmable to meet different needs
Lightest weight option
Freewheels when off or if battery runs out; minimally increased resistance
Does not compromise configuration of the wheelchair, which is significant for pushing without the device
Allows for more user-defined settings for use in different environments and when selecting input devices *(control via Bluetooth wearable or a hard-wired switch)*
Weather-sealed / water-resistant
Can be used with folding or rigid MWCs
Can be used with manual tilt-in-space wheelchairs to help caregivers

Considerations
User must be able to control rate of descent down grades and ramps
Disc breaks can be added to the wheelchair to assist with deceleration, but are a separate device
Certain amount of training may be required for the user to safely operate

Conclusion

WHY IS A K0005 BEST PRACTICE FOR FULL TIME WHEELCHAIR USERS?

A fully customizable wheelchair made of lightest high-strength materials will:

- Decrease risk of upper extremity pain or injury
- Contribute to short and long-term functional success
- Decrease the incidence of secondary complications
- Last longer than standard wheelchairs
- All of the above also make them more cost effective

WHY IS IT IMPORTANT TO CUSTOMIZE FRAME DIMENSIONS?

We maximize client potential through a custom fit.

The evidence-based recommendation from RESNA's position paper "The Application of Ultralight Manual Wheelchairs" states that, "The person cannot conform to the wheelchair, but the wheelchair must conform to the individual." By doing this, we...

- Optimize roll efficiency of the manual wheelchair
- Reduce risk of repetitive strain injury over time
- Aid in postural alignment
- Reduce risk of pressure injury
- Improve function

Quick Guide - MWC Fit

Important considerations when completing wheelchair specifications:

- Choose the wheelchair you will use for the evaluation (the client's existing wheelchair or demo) – stay with this wheelchair throughout the measuring process
- Measure the demo being used for your records and as a reference for new wheelchair specifications. *Be sure to include overall width and overall frame length – this is the functional footprint of the wheelchair and may be crucial for the client's environmental access and function*
- Place the client in the demo wheelchair and ask the client to sit in their most typical and desired position – the position they are in 80% of the time
- Now you are ready to complete your measurements using the selected wheelchair as a reference, changing what needs to change for optimal configuration

Below is a model for how to achieve the best fit:

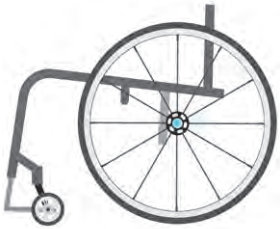

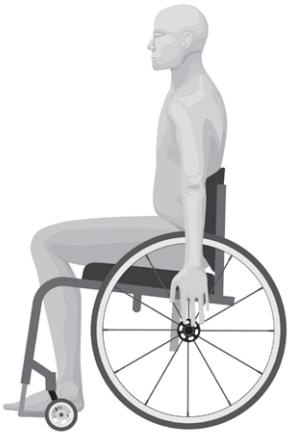

Width

- Seat width
- Front seat width
- Footrest width

Length

Overall frame length -

- Seat depth
- Frame depth
- Front frame angle

Wheel access

- Seat-to-floor heights
- Center of gravity
- Camber
- Wheel spacing

WC width quick reference

Seat width + front seat width + footrest width (standard ***or*** V)

Seat width

Outside of seat tube at back post to the outside of the opposite seat tube

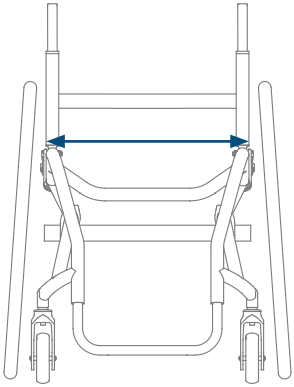

Front seat width *(seat taper)*

Inside of front frame tube to inside of opposite front frame tube

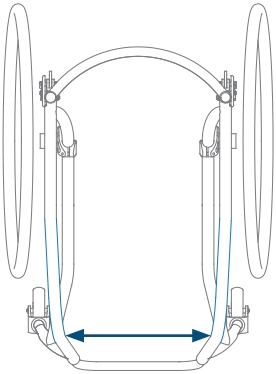

Footrest width - Standard

Inside of front frame tube to inside of opposite front frame tube

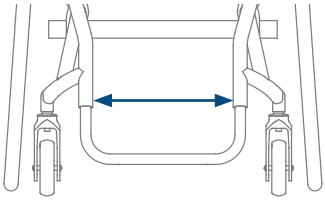

Footrest width - V

Inside of front frame tube to inside of opposite front frame tube 2 ½” above footrest

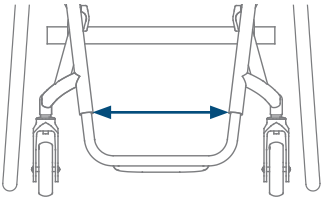

WC length quick reference

Overall frame length = seat depth + frame depth + frame angle.

Using the overall frame length to determine the front frame angle is the most accurate way of measuring for it.

Overall frame length

Front edge of footrest to front edge of back post

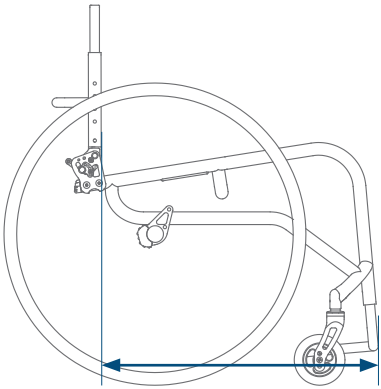

Seat depth

Front of back post to front of seat sling

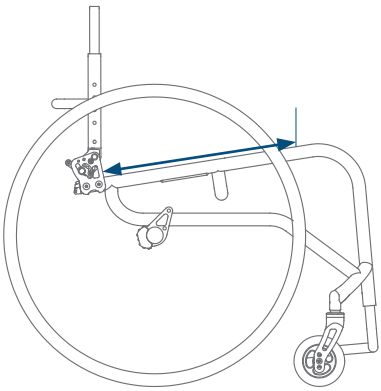

Custom frame depth

Front of back post to beginning of bend

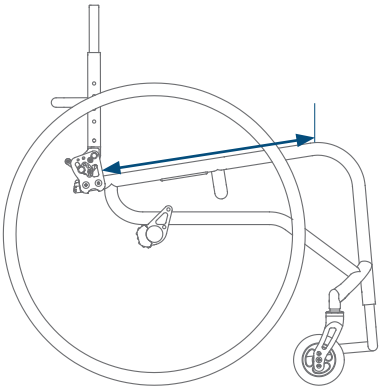

Front frame angle

Frame front to floor *(behind front frame)*

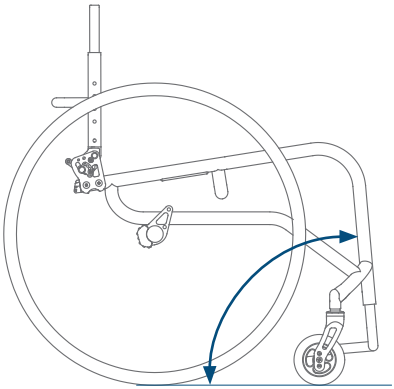

Dimensions & tips

Frame dimension	
Seat width	Width should only be as wide as necessary, allowing for use of frame to promote postural alignment, improve wheel access, and maximize environmental access
Seat depth	Maximize support of the upper leg and pressure distribution without interfering with posterior aspect of lower leg
Frame depth	Match frame to client proportionally to the upper leg Bend of frame should start at popliteal fossa
Ergo seat	Select a size that goes at least 1" past the greater trochanter
FSTFH	Must consider the cushion being utilized when selecting Consider transfers, access under tables, desks, and clearance required under foot plate Seat slope is the difference in front and rear seat heights
RSTFH	Use rear seat height to maximize wheel access and achieve a more efficient push
Overall frame length or front frame angle	Select so that frame is proportional to the length of the client's side profile while sitting in the desired position
Footrest width	Select a width that allows for adequate space for the client's feet and tapers to the client's desired position
Seat back height	Select a seat back height that allows the prescribed back support to reach desired height for adequate postural support
Seat back angle	Select seat back angle that results in desired support, balance, and optimal spinal curves when seated
Center of gravity	Ideally 80% of the client's body weight on the rear wheel. Achieved this by bringing the rear wheel forward, reducing the amount of weight on the front casters and improving wheel access
Camber	Eases initiation of movement and turns, increases lateral stability and, therefore, functional width of wheelchair
Wheel spacing	May use in combination with camber to achieve a neutral shoulder alignment during propulsion, impacts functional width of the WC
Wheel size	Select a wheel size that allows for 100-120° of elbow flexion when the client is at the start of a push stroke

Pro tip	*Pro tips are not all inclusive and do not take the place of a skilled wheelchair seating and mobility evaluation*
	Matching the frame proportionally to the client results in better weight distribution and unloading of casters, easing propulsion
	For best results, your demo should have an ergo seat
	Most adults require between 17-19.5” for front seat height The more bend in the knee, the lower the seat to floor height required for adequate clearance at foot plate
	Must consider how much seat slope the individual can manage functionally and any range of motion limitations. With client’s upper extremity extended down to the side, middle finger should be at bottom of wheel hub
	Consider hamstring length, spasticity, overall length of wheelchair Overall frame length is inherently more accurate than choosing a front angle, so use overall frame length in conjunction with seat depth and custom frame depth
	Consider 0.5” on each side Consider transfer style and types of footwear worn
	Have your back support demo on the wheelchair
	With the client’s upper extremity extended down to the side, middle finger should be at center of rear axle, or with client in wheelie, caster should be 2" - 4” off ground 2.5” to 3.5” is typically a good starting point
	Can negatively impact accessibility with adult wheelchairs if >3°
	Set seat to floor height first in order to achieve postural stability and environmental access. Then apply the correct wheel size for optimal wheel access

Glossary

Wheelchair & Parts	
WC:	Wheelchair
WCs:	Wheelchairs
MWC:	Manual Wheelchair
MWCs:	Manual Wheelchairs
STFH:	Seat-to-Floor Height
PMD:	Power Mobility Device
FSTFH:	Front Seat-to-Floor Height
RSTFH:	Rear Seat-to-Floor Height
STBA:	Seat-to-Back Angle
COG:	Center of Gravity
ELR:	Elevating Legrest
Client Function	
ROM:	Range of Motion
ADLs:	Activities of Daily Living
MRADLs:	Mobility Related Activities of Daily Living

Body & Posture	
PPT:	Posterior Pelvic Tilt
ASIS:	Anterior Superior Iliac Spine
PSIS:	Posterior Superior Iliac Spine
IT:	Ischial Tuberosity
ITs:	Ischial Tuberosities
LE:	Lower Extremity
LEs:	Lower Extremities
UE:	Upper Extremity
UEs:	Upper Extremities
Process	
LMN:	Letter of Medical Necessity
DME:	Durable Medical Equipment
CRT:	Complex Rehab Technology
POC:	Plan of Care
CMS:	Centers for Medicare & Medicaid Services
People	
ATP:	Assistive Technology Professional
MD:	Medical Doctor/Physician
NP:	Nurse Practitioner
CNA:	Certified Nursing Assistant
PA:	Physician Assistant

References

1. Paralyzed Veterans of America Consortium for Spinal Cord Medicine. Preservation of upper limb function following spinal cord injury: a clinical practice guideline for health-care professionals. *J Spinal Cord Med.* 2005;28(5):434.
2. Arledge S, Armstrong W, Babinec M, et al. RESNA Wheelchair Service Provision Guide. Arlington, VA: Rehabilitation Engineering and Assistive Technology Society of North America; 2011.
3. World Health Organization. *International Classification of Functioning, Disability and Health (ICF)*. Geneva, Switzerland: WHO Press; 2002.
4. Dicianno BE, Lieberman JMLA, Schmeler MROLA, et al. Rehabilitation Engineering and Assistive Technology Society of North America's Position on the Application of Tilt, Recline, and Elevating Legrests for Wheelchairs Literature Update. *Assist Technol.* 2015;27(3):193-198.
5. Cowan RE, Nash MS, Collinger JL, Koontz AM, Boninger ML. Impact of surface type, wheelchair weight, and axle position on wheelchair propulsion by novice older adults. *Arch Phys Med Rehabil*. 2009;90(7):1076-1083.
6. DiGiovine, C., Rosen, L., Berner, T., Betz, K., Roesler, T. and Schmeler, M. (2012). *RESNA Position on the Application of Ultralight Manual Wheelchairs*. [online] Resna.org. Available at: https://www.resna.org/sites/default/files/legacy/resources/position-papers/UltraLightweightManualWheelchairs.pdf.
7. Ogilvie, C., Khalili, M., Van der Loos, H. and Borisoff, J. (2018). *How do Mobility Add-Ons Change the Loading Conditions on Manual Wheelchair Frames?*. [online] Resna.org. Available at: https://www.resna.org/sites/default/files/conference/2018/emerging_technology/Ogilvie.html.
8. Thomas, L., Sparrey, C. and Borisoff, J. (2017). *Defining The Stability Limits Of A Manual Wheelchair With Adjustable Seat And Backrest*. [online] Resna.org. Available at: https://www.resna.org/sites/default/files/conference/2017/wheeled_mobility/Thomas.html.